Innova-Mass® Series 240 /241
Vortex Volumetric and Mass Flow Meters

Models: 240-V, VT, VTP, LP / 241-V, VT, VTP, LP

Instruction Manual

Document Number IM-240
Revision: H, December 2011

SIERRA®
EXPERIENCE OUR PASSION FOR FLOW!

CORPORATE HEADQUARTERS
5 Harris Court, Building L Monterey, CA 93940
Phone (831) 373-0200 (800) 866-0200 Fax (831) 373-4402
www.sierrainstruments.com

EUROPE HEADQUARTERS
Bijlmansweid 2 1934RE Egmond aan den Hoef
The Netherlands
Phone +31 72 5071400 Fax +31 72 5071401

ASIA HEADQUARTERS
Rm. 618, Tomson Centre, Bldg A, 188 Zhang Yang Road
Pu Dong New District, Shanghai, P.R. China
Phone: + 8621 5879 8521 Fax: +8621 5879 8586

IMPORTANT CUSTOMER NOTICE: OXYGEN SERVICE

Unless you have specifically ordered Sierra's optional O_2 cleaning, this flow meter may not be fit for oxygen service. Sierra Instruments, Inc., is not liable for any damage or personal injury, whatsoever, resulting from the use of Sierra Instruments standard mass flow meters for oxygen gas. You are responsible for cleaning the mass flow meter to the degree required for your oxygen flow application. However, some models can only be properly cleaned during the manufacturing process.

© COPYRIGHT SIERRA INSTRUMENTS 2011
No part of this publication may be copied or distributed, transmitted, transcribed, stored in a retrieval system, or translated into any human or computer language, in any form or by any means, electronic, mechanical, manual, or otherwise, or disclosed to third parties without the express written permission of Sierra Instruments. The information contained in this manual is subject to change without notice.

TRADEMARKS
Innova-Flo® and Innova-Mass® are trademarks of Sierra Instruments, Inc. Other product and company names listed in this manual are trademarks or trade names of their respective manufacturers.

Table of Contents

Chapter 1 Introduction

Innova-Mass Vortex Mass Flow Meters 1-1
Using this Manual 1-1
Note and Safety Information 1-2
Receipt of System Components 1-2
Technical Assistance 1-2
How the Innova-Mass Vortex Meter Operates 1-3
Velocity Measurement 1-3
Vortex Shedding Frequency 1-4
Vortex Frequency Sensing 1-4
Flow Velocity Range 1-5
Temperature Measurement 1-6
Pressure Measurement 1-6
Flow Meter Configurations 1-7
Multivariable Options 1-7
Line Size / Process Conditions / Materials 1-8
Flow Meter Electronics 1-8

Chapter 2 Installation

Installation Overview 2-1
Flow Meter Installation Requirements 2-1
Unobstructed Flow Requirements 2-2
Series 240 In-Line Flow Meter Installation 2-3
Wafer-Style Flow Meter Installation 2-4
Flange-Style Flow Meter Installation 2-5
Series 241 Insertion Flow Meter Installation 2-6
Cold Tap Guidelines 2-7
Hot Tap Guidelines 2-8
Flow Meter Insertion 2-10
Installing Meters with a Compression Connection 2-11
Installing Meters with a Packing Gland Connection 2-13
Installing Meters (Packing Gland), No Insertion Tool 2-16
Adjusting Meter Orientation 2-18
Display/Keypad Adjustment 2-18
Enclosure Adjustment 2-19
Loop Power Flow Meter Wiring Connections 2-20
Input Power Connections 2-20
4-20 mA Output Connections 2-21
Pulse Output Connections 2-22
Frequency Output Connections 2-23
Optional Backlight Connections 2-23
Remote Electronics Wiring 2-24
High Power Flow Meter Wiring Connections 2-26
Input Power Connections 2-26
4-20 mA Output Connections 2-28
Frequency Output Connections 2-29

Pulse Output Connections 2-30
Alarm Output Connections 2-32
Remote Electronics Wiring 2-33
Optional Input Electronics Wiring 2-34
Optional Energy EMS RTD Input Wiring 2-34
Optional External 4-20 mA Input Wiring 2-35
Optional Contact Closure Input Wiring 2-36

Chapter 3 Operating Instructions

Flow Meter Display/Keypad 3-1
Start Up 3-2
Using the Setup Menus 3-4
Programming the Flow Meter 3-5
Output Menu 3-6
Display Menu 3-8
Alarms Menu 3-9
Totalizer #1 Menu 3-10
Totalizer #2 Menu 3-11
Energy Menu 3-12
Fluid Menu 3-13
Units Menu 3-14
Time and Date Menu 3-15
Diagnostics Menu 3-16
Calibration Menu 3-17
Password Menu 3-18

Chapter 4 Serial Communications

HART Communications 4-1
Wiring 4-2
HART Commands with the DD Menu 4-3
HART Commands with Generic DD Menu 4-4
MODBUS Communications 4-7
Wiring 4-7
Menu Items 4-8
Register Definitions 4-10

Chapter 5 Troubleshooting and Repair

Hidden Diagnostics Menus 5-1
Level One Hidden Diagnostics Values 5-3
Level Two Hidden Diagnostics Values 5-4
Analog Output Calibration 5-7
Troubleshooting the Flow Meter 5-8
First Check Items 5-8
Record Values 5-8
Determine the Fault 5-9
Symptom: Output at no Flow 5-9
Symptom: Erratic Output 5-9
Symptom: No Output 5-11
Symptom: Meter Displays Temperature Fault 5-12

Symptom: Meter Displays Pressure Fault 5-13
Electronics Assembly Replacement..... 5-14
Pressure Sensor Replacement (Series 240 Only) 5-15
Returning Equipment to the Factory..... 5-15

Appendix A Product Specifications

Appendix B Flow Meter Calculations

Appendix C Glossary

Figures

1-1. In-Line Vortex Multi-Parameter Mass Flow Meter..... 1-3
1-2. Measurement Principle of Vortex Flow Meters 1-4
1-3. Reynolds Number Range of the Innova-Mass..... 1-6

2-1. Recommended Pipe Length Required for Installation..... 2-2
2-2. Flange Bolt Torquing Sequence 2-3
2-3. Wafer-Style Flow Meter Installation 2-4
2-4. Flange-Style Flow Meter Installation 2-5
2-5. Hot Tap Sequence..... 2-9
2-6. Insertion Calculation (Compression Type)..... 2-11
2-7. Flow Meter with Compression Type Fitting..... 2-12
2-8. Insertion Calculation (Meters with Insertion Tool) 2-13
2-9. Flow Meter with Permanent Insertion Tool..... 2-14
2-10. Flow Meter with Removable Insertion Tool..... 2-15
2-11. Insertion Calculation (Meters without Insertion Tool) 2-16
2-12. Display/Keypad Viewing Adjustment..... 2-18
2-13. Enclosure Viewing Adjustment..... 2-19
2-14. Loop Power Wiring Terminals 2-20
2-15. DC Power Connections..... 2-20
2-16. Load Resistance Versus Input Voltage..... 2-21
2-17. Isolated Pulse Output Using External Power Supply 2-22
2-18. Non-Isolated Pulse Output Using External Power Supply ... 2-22
2-19. Isolated Frequency Output Using External Power Supply ... 2-23
2-20. Non-Isolated Freq. Out. Using External Power Supply..... 2-23
2-21. Backlight Using External Power Supply 2-23
2-22. Loop Power Volumetric Flowmeter Junction Box 2-24
2-23. Loop Power Mass Flowmeter Junction Box..... 2-25
2-24. AC Wiring Terminals 2-26
2-25. AC Power Connections..... 2-26
2-26. DC Wiring Terminals 2-27
2-27. DC Power Connections..... 2-27
2-28. Load Resistance Versus Input Voltage..... 2-28
2-29. Isolated 4-20 Output Using External Power Supply..... 2-28
2-30. Non-Isolated 4-20 Output Using Input Power Supply..... 2-29
2-31. Isolated 4-20 Output Using Meter Power Supply (AC only) 2-29

2-32. Isolated Frequency Output Using External Power Supply ... 2-30
2-33. Non-Isolated Frequency Output Using Input Power Supply 2-30
2-34. Isolated Freq. Out. Using Meter Power Sup. (AC only)..... 2-30
2-35. Isolated Pulse Output Using External Power Supply 2-31
2-36. Non-Isolated Pulse Output Using Input Power Supply 2-31
2-37. Isolated Pulse Output Using Meter Power Sup. (AC only) .. 2-31
2-38. Isolated Alarm Output Using External Power Supply..... 2-32
2-39 Non-Isolated Alarm Output Using Meter Power Supply..... 2-32
2-40 Isolated Alarm Output Using Meter Power Sup. (AC only) 2-33
2-41 High Power Flow Meter Junction Box 2-33
2-42. Optional Energy EMS RTD Input Wiring..... 2-34
2-43. External 4-20 mA Input Wiring – External Power Supply... 2-35
2-44. External 4-20 mA Input Wiring – DC Powered Meter..... 2-35
2-45. External 4-20 mA Input Wiring – AC Powered Meter..... 2-36
2-46. Optional External Contact Closure Input Wiring 2-36

3-1. Flow Meter Display/Keypad..... 3-1

4-1. Loop Powered Meter Wiring (HART)..... 4-1
4-2. DC Powered Meter Wiring (HART) 4-2
4-3. AC Powered Meter Wiring (HART) 4-2
4-4. RS-485 Wiring (MODBUS) 4-7

5-1. Electronics Stack Sensor Connections..... 5-11
5-2. Remote Feed Through Board Sensor Connections..... 5-11
5-3. Vortex Sensor Connector..... 5-12
5-4. Temperature Sensor Connector 5-13
5-5. Pressure Sensor Connector 5-13

Tables

2-1. Minimum Recommended Stud Bolt Lengths 2-3

4-1. Byte Order (MODBUS)..... 4-9
4-2. Register Definitions (MODBUS) 4-11

Warnings and Cautions

Warning!

Consult the flow meter nameplate for specific flow meter approvals before any hazardous location installation.

Hot tapping must be performed by a trained professional. U.S. regulations often require a hot tap permit. The manufacturer of the hot tap equipment and/or the contractor performing the hot tap is responsible for providing proof of such a permit.

All flow meter connections, isolation valves and fittings for cold/hot tapping must have the same or higher pressure rating as the main pipeline.

For Series 241 insertion flow meter installations, an insertion tool must be used for any installation where a flow meter is inserted under pressure greater than 50 psig.

To avoid serious injury, DO NOT loosen a compression fitting under pressure.

To avoid potential electric shock, follow National Electric Code or your local code when wiring this unit to a power source. Failure to do so could result in injury or death. All AC power connections must be in accordance with published CE directives. All wiring procedures must be performed with the power Off.

Before attempting any flow meter repair, verify that the line is not pressurized. Always remove main power before disassembling any part of the mass flow meter.

Caution!

Calibration must be performed by qualified personnel. VorTek Instruments, Inc., strongly recommends that you return your flow meter to the factory for calibration.

In order to achieve accurate and repeatable performance, the flow meter must be installed with the specified minimum length of straight pipe upstream and downstream of the flow meter's sensor head.

When using toxic or corrosive gases, purge the line with inert gas for a minimum of four hours at full gas flow before installing the flow meter.

For Series 241 insertion flow meter installations, the sensor alignment pointer must point downstream in the direction of flow.

The AC wire insulation temperature rating must meet or exceed 85°C (185°F)

Chapter 1 Introduction

Innova-Mass® Multi-Parameter Vortex Mass Flow Meters

The Sierra Instruments' Series 240 In-Line and the Series 241 Insertion Innova-Mass Vortex Flow Meters provide a reliable solution for process flow measurement. From a single entry point in the pipeline, Innova-Mass meters offer precise measurements of mass or volumetric flow rates.

Multi-Parameter Mass Flow Meters

Mass flow meters utilize three primary sensing elements: a vortex shedding velocity sensor, an RTD temperature sensor, and a solid state pressure sensor to measure the mass flow rate of gases, liquids, and steam. Meters are available as loop powered devices or with up to three 4-20 mA analog output signals for monitoring your choice of the five process variables (mass flow, volumetric flow, temperature, pressure and fluid density). The Energy Monitoring option permits real-time calculation of energy consumption for a facility or process.

Volumetric Flow Meters

The primary sensing element of a volumetric flow meter is a vortex shedding velocity sensor. Meters are loop powered. The analog 4-20 mA output signal offers your choice of volumetric or mass flow rate. Mass flow rate is based on a constant value for fluid density stored in the instrument's memory.

Both the mass and volumetric flow meters can be ordered with a local keypad/display which provides instantaneous flow rate, total, and process parameters in engineering units. A pulse output signal for remote totalization and MODBUS or HART communications are also available. Innova-Mass digital electronics allows for easy reconfiguration for most gases, liquids and steam. The Sierra Series 240 and 241 Innova-Mass' simple installation combines with an easy-to-use interface that provides quick set up, long term reliability and accurate mass flow measurement over a wide range of flows, pressures and temperatures.

Using This Manual

This manual provides information needed to install and operate both the Series 240 In-Line and Series 241 Insertion Innova-Mass Flow Meters.

- Chapter 1 includes the introduction and product description
- Chapter 2 provides information needed for installation
- Chapter 3 describes system operation and programming
- Chapter 4 provides information on HART and MODBUS protocols
- Chapter 5 covers troubleshooting and repair

Appendix A - Product Specifications, Appendix B – Approvals,

Appendix C – Flow Meter Calculations, Appendix D – Glossary of Terms

Note and Safety Information

We use note, caution and warning statements throughout this book to draw your attention to important information.

Warning!
This statement appears with information that is important to protect people and equipment from damage. Pay very close attention to all warnings that apply to your application.

Caution!
This statement appears with information that is important for protecting your equipment and performance. Read and follow all cautions that apply to your application.

Note
This statement appears with a short message to alert you to an important detail.

Receipt of System Components

When receiving a Sierra mass flow meter, carefully check the outside packing carton for damage incurred in shipment. If the carton is damaged, notify the local carrier and submit a report to the factory or distributor. Remove the packing slip and check that all ordered components are present. Make sure any spare parts or accessories are not discarded with the packing material. Do not return any equipment to the factory without first contacting Sierra Customer Service.

Technical Assistance

If you encounter a problem with your flow meter, review the configuration information for each step of the installation, operation and set up procedures. Verify that your settings and adjustments are consistent with factory recommendations. Refer to Chapter 5, Troubleshooting, for specific information and recommendations.

If the problem persists after following the troubleshooting procedures outlined in Chapter 5, contact Sierra Instruments, Technical Support at (800)-866-0200 or (831) 373-0200 between 7:30 a.m. and 5:00 p.m. MST. When calling Technical Support, have the following information on hand:

- the serial number and Sierra order number (all marked on the meter nameplate)
- the problem you are encountering and any corrective action taken
- application information (fluid, pressure, temperature and piping configuration)

How the Innova-Mass Vortex Mass Flow Meter Operates

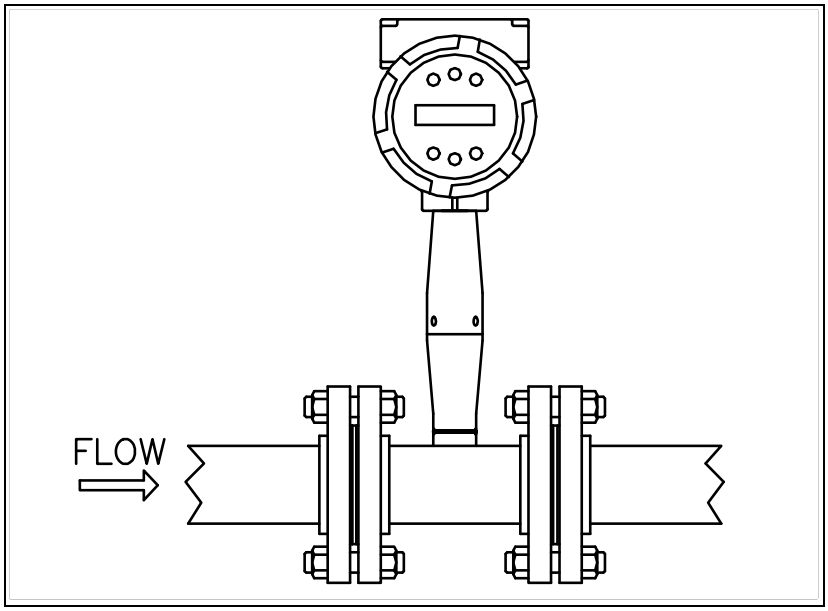

Figure 1-1. In-Line Vortex Multi-Parameter Mass Flow Meter

Sierra Series 240 and 241 Innova-Mass Multi-Parameter Vortex Mass Flow Meters use a unique sensor head to monitor mass flow rate by directly measuring three variables–fluid velocity, temperature and pressure. The built-in flow computer calculates the mass flow rate and volumetric flow rate based on these three direct measurements. The velocity, temperature and pressure sensing head is built into the vortex meter's flow body. To measure fluid velocity, the flow meter incorporates a bluff body (shedder bar) in the flow stream and measures the frequency of vortices created by the shedder bar. Temperature is measured using a platinum resistance temperature detector (PRTD). Pressure measurement is achieved using a solid-state pressure transducer. All three elements are combined into an integrated sensor head assembly located downstream of the shedder bar within the flow body.

Velocity Measurement

The Innova-Mass vortex velocity sensor is a patented mechanical design that minimizes the effects of pipeline vibration and pump noise, both of which are common error sources in flow measurement with vortex flow meters. The velocity measurement is based on the well-known Von Karman vortex shedding phenomenon. Vortices are shed from a shedder bar, and the vortex velocity sensor located downstream of the shedder bar senses the passage of these vortices. This method of velocity measurement has many advantages including inherent linearity, high turndown, reliability and simplicity.

Vortex Shedding Frequency

Von Karman vortices form downstream of a shedder bar into two distinct wakes. The vortices of one wake rotate clockwise while those of the other wake rotate counterclockwise. Vortices generate one at a time, alternating from the left side to the right side of the shedder bar. Vortices interact with their surrounding space by over-powering every other nearby swirl on the verge of development. Close to the shedder bar, the distance (or wave length) between vortices is always constant and measurable. Therefore, the volume encompassed by each vortex remains constant, as shown below. By sensing the number of vortices passing by the velocity sensor, the Innova-Mass Flow Meter computes the total fluid volume.

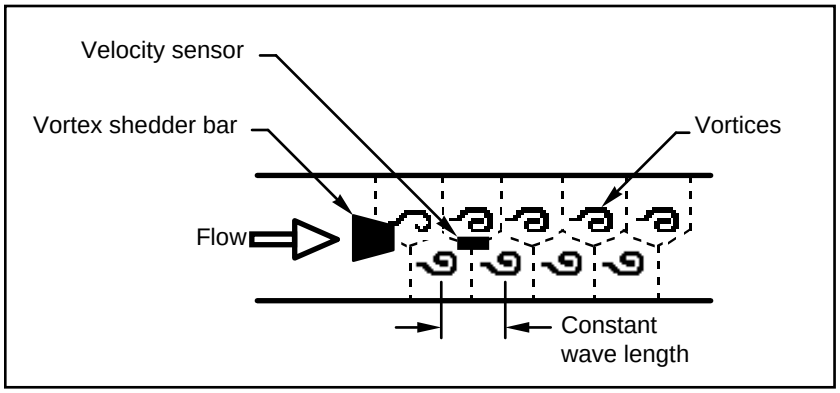

Figure 1-2. Measurement Principle of Vortex Flow Meters

Vortex Frequency Sensing

The velocity sensor incorporates a piezoelectric element that senses the vortex frequency. This element detects the alternating lift forces produced by the Von Karman vortices flowing downstream of the vortex shedder bar. The alternating electric charge generated by the piezoelectric element is processed by the transmitter's electronic circuit to obtain the vortex shedding frequency. The piezoelectric element is highly sensitive and operates over a wide range of flows, pressures and temperatures.

Flow Velocity Range

To ensure trouble-free operation, vortex flow meters must be correctly sized so that the flow velocity range through the meter lies within the measurable velocity range (with acceptable pressure drop) and the linear range.

The measurable range is defined by the minimum and maximum velocity using the following table.

	Gas	Liquid	
Vmin	$\sqrt{\frac{25}{\rho}}$ ft/s	1 ft/s	English ρ (lb/ft^3)
Vmax	300 ft/s	30 ft/s	
Vmin	$\sqrt{\frac{37}{\rho}}$ m/s	0.3 m/s	Metric ρ (kg/m^3)
Vmax	91 m/s	9.1 m/s	

The pressure drop for series 241 insertion meters is negligible. The pressure drop for series 240 in-line meters is defined as:

$\Delta P = .00024\ \rho\ V^2$ English units (ΔP in psi, ρ in lb/ft^3, V in ft/sec)

$\Delta P = .000011\ \rho\ V^2$ Metric units (ΔP in bar, ρ in kg/m^3, V in m/sec)

The linear range is defined by the Reynolds number. The Reynolds number is the ratio of the inertial forces to the viscous forces in a flowing fluid and is defined as:

$$Re = \frac{\rho\ V\ D}{\mu}$$

Where

Re = Reynolds Number
ρ = mass density of the fluid being measured
V = velocity of the fluid being measured
D = internal diameter of the flow channel
μ = viscosity of the fluid being measured

The Strouhal number is the other dimensionless number that quantifies the vortex phenomenon. The Strouhal number is defined as:

$$St = \frac{f\ d}{V}$$

Where

St = Strouhal Number
f = frequency of vortex shedding
d = shedder bar width
V = fluid velocity

As shown in Figure 1-3, Innova-Mass meters exhibit a constant Strouhal number across a large range of Reynolds numbers, indicating a consistent linear output over a wide range of flows and fluid types. Below this linear range, the intelligent electronics in Innova-Mass automatically corrects for the variation in the Strouhal number with the Reynolds number. The meter's smart electronics corrects for this non-linearity via its simultaneous measurements of the process fluid temperature and pressure. This data is then used to calculate the Reynolds number in real time. Innova-Mass meters automatically correct down to a Reynolds number of 5,000.

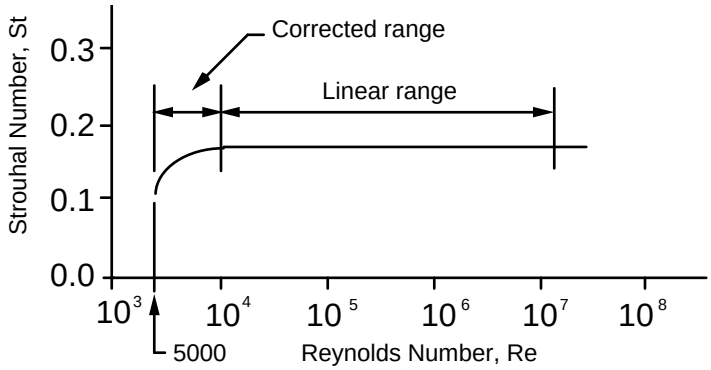

Figure 1-3. Reynolds Number Range for the Innova-Mass

Temperature Measurement

Innova-Mass Flow Meters use a 1000 ohm platinum resistance temperature detector (PRTD) to measure fluid temperature.

Pressure Measurement

Innova-Mass Flow Meters incorporate a solid-state pressure transducer isolated by a 316 stainless steel diaphragm. The transducer itself is micro-machined silicon, fabricated using integrated circuit processing technology. A nine-point pressure/temperature calibration is performed on every sensor. Digital compensation allows these transducers to operate within a 0.3% of full scale accuracy band within the entire ambient temperature range of -40°F to 140°F (-40° to 60°C). Thermal isolation of the pressure transducer ensures the same accuracy across the allowable process fluid temperature range of -330°F to 750°F (-200° to 400°C).

Flow Meter Configurations

Innova-Mass Vortex Mass Flow Meters are available in two model configurations:

- Series 240 in-line flow meter (replaces a section of the pipeline)
- Series 241 insertion flow meter (requires a “cold” tap or a “hot” tap into an existing pipeline)

Both the in-line and insertion configurations are similar in that they both use identical electronics and have similar sensor heads. Besides installation differences, the main difference between an in-line flow meter and an insertion flow meter is their method of measurement.

For an in-line vortex flow meter, the shedder bar is located across the entire diameter of the flow body. Thus, the entire pipeline flow is included in the vortex formation and measurement. The sensing head, which directly measures velocity, temperature and pressure is located just downstream of the shedder bar.

Insertion vortex flow meters have a shedder bar located across the diameter of a short tube. The velocity, temperature and pressure sensor are located within this tube just downstream of a built-in shedder bar. This entire assembly is called the insertion sensing head. It fits through any entry port with a 1.875 inch minimum internal diameter.

The sensing head of an insertion vortex flow meter directly monitors the velocity at a point in the cross-sectional area of a pipe, duct, or stack (referred to as “channels”). The velocity at a point in the pipe varies as a function of the Reynolds number. The insertion vortex flow meter computes the Reynolds number and then computes the total flow rate in the channel. The output signal of insertion meters is the total flow rate in the channel. The accuracy of the total flow rate computation depends on adherence to the piping installation requirements given in Chapter 2. If adherence to those guidelines cannot be met, contact the factory for specific installation advice.

Multivariable Options

The 240 or 241 models are available with the following options:
V, volumetric flowmeter; VT, velocity and temperature sensors; VTP, velocity, temperature, and pressure sensors; VT-EM energy output options; VTP-EM, energy options with pressure; VT-EP, external pressure transmitter input.

Line Size / Process Connections / Materials

The 240 In-line model is built for line sizes ½ through 4 inch wafer or ½ through 8 inch flanged design using ANSI 150, 300, 600, PN16, 40, or 64 class flanges.

The 241 Insertion model can be used in line sizes 2 inch and greater and is built with a compression fitting or packing gland design using 2 inch NPT, or 2 inch flanged connections (ANSI 150, 300, 600, PN16, 40, or 64 class flanges). The packing gland design can be ordered with a permanent or removable retractor.

The 240 In-line model can be built with A105 carbon steel, 316L stainless steel, or Hastelloy C-276. The 241 Insertion model can be built with 316L stainless steel or Hastelloy C-276.

Flow Meter Electronics

Innova-Mass Flow Meter electronics are available mounted directly to the flow body, or remotely mounted. The electronics housing may be used indoors or outdoors, including wet environments. Available input power options are: DC loop powered (2-wire), DC powered, or AC powered. Three analog output signals are available for your choice of three of the five process variables: mass flow rate, volumetric flow rate, temperature, pressure or fluid density. A pulse output signal for remote totalization and MODBUS or HART communications are also available.

Innova-Mass Flow Meters include a local 2 x 16 character LCD display housed within the enclosure. Local operation and reconfiguration is accomplished using six pushbuttons operated via finger touch. For hazardous locations, the six buttons can be operated with the electronics enclosure sealed using a hand-held magnet, thereby not compromising the integrity of the hazardous location certification.

The electronics include nonvolatile memory that stores all configuration information. The nonvolatile memory allows the flow meter to function immediately upon power up, or after an interruption in power. All flowmeters are calibrated and configured for the customer's flow application.

Chapter 2 Installation

Installation Overview

Sierra's Innova-Mass Vortex Flow Meter installations are simple and straightforward. Both the Series 240 In-Line and Series 241 Insertion type flow meter installations are covered in this chapter. After reviewing the installation requirements given below, see page 2-3 for Series 240 installation instructions. See page 2-6 for Series 241 installation instructions. Wiring instructions begin on page 2-20.

Flow Meter Installation Requirements

Warning!
Consult the flow meter nameplate for specific flow meter approvals before any hazardous location installation.

Before installing the flow meter, verify the installation site allows for these considerations:

1. Line pressure and temperature will not exceed the flow meter rating.

2. The location meets the required minimum number of pipe diameters upstream and downstream of the sensor head as illustrated in Figure 2-1.

3. Safe and convenient access with adequate overhead clearance for maintenance purposes.

4. Verify that the cable entry into the instrument meets the specific standard required for hazardous area installations.

5. For remote installations, verify the supplied cable length is sufficient to connect the flow meter sensor to the remote electronics.

Also, before installation check your flow system for anomalies such as:

- leaks
- valves or restrictions in the flow path that could create disturbances in the flow profile that might cause unexpected flow rate indications

Unobstructed Flow Requirements

Select an installation site that will minimize possible distortion in the flow profile. Valves, elbows, control valves and other piping components may cause flow disturbances. Check your specific piping condition against the examples shown below. In order to achieve accurate and repeatable performance install the flow meter using the recommended number of straight run pipe diameters upstream and downstream of the sensor.

Note: For liquid applications in vertical pipes, avoid installing with flow in the downward direction because the pipe may not be full at all points. Choose to install the meter with flow in the upward direction if possible.

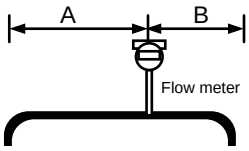

Example 1.
One 90° elbow before meter

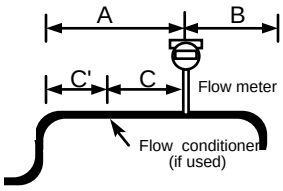

Example 2.
Two 90° elbows before meter in one plane

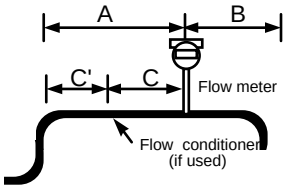

Example 3.
Two 90° elbows before meter out of plane (if three 90° bends present, double recommended length)

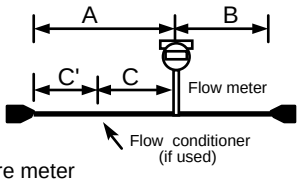

Example 4.
Reduction before meter

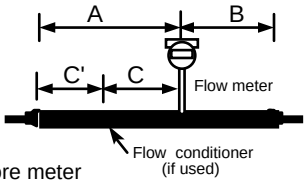

Example 5.
Expansion before meter

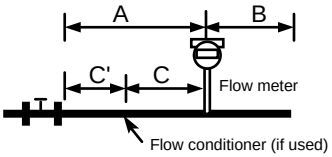

Example 6.
Regulator or valve partially closed before meter (If valve is always wide open, base length requirements on fitting directly preceding it)

Minimum Required Upstream Diameters					Minimum Required Downstream Diameters	
	No Flow Conditioner	With Flow Conditioner			No Flow Conditioner	With Flow Conditioner
Example	A	A	C	C´	B	B
1	10 D	N/A	N/A	N/A	5 D	5 D
2	15 D	10 D	5 D	5 D	5 D	5 D
3	25 D	10 D	5 D	5 D	10 D	5 D
4	10 D	10 D	5 D	5 D	5 D	5 D
5	20 D	10 D	5 D	5 D	5 D	5 D
6	25 D	10 D	5 D	5 D	10 D	5 D
D = Internal diameter of channel. N/A = Not applicable						

Figure 2-1. Recommended Pipe Length Requirements for Installation, Series 240 and 241

Series 240 In-Line Flow Meter Installation

Install the Series 240 In-Line Flow Meter between two conventional pipe flanges as shown in Figures 2-3 and 2-4. Table 2-1 provides the recommended minimum stud bolt lengths for wafer-style meter body size and different flange ratings.

The meter inside diameter is equal to the same size nominal pipe ID in schedule 80. For example, a 2” meter has an ID of 1.939” (2” schedule 80). **Do not install the meter in a pipe with an inside diameter smaller than the inside diameter of the meter.** For schedule 160 and higher pipe, a special meter is required. Consult the factory before purchasing the meter.

Series 240 Meters require customer-supplied gaskets. When selecting gasket material make sure that it is compatible with the process fluid and pressure ratings of the specific installation. Verify that the inside diameter of the gasket is larger than the inside diameter of the flow meter and adjacent piping. If the gasket material extends into the flow stream, it will disturb the flow and cause inaccurate measurements.

Flange Bolt Specifications

Stud Bolt Lengths for Each Flange Rating (inches)			
Line Size	**Class 150 and PN16**	**Class 300 and PN40**	**Class 600 and PN64**
1 inch	6.00	7.00	7.50
1.5 inch	6.25	8.50	9.00
2 inch	8.50	8.75	9.50
3 inch	9.00	10.00	10.50
4 inch	9.50	10.75	12.25

Table 2-1. Minimum Recommended Stud Bolt Lengths for Wafer Meters

The required bolt load for sealing the gasket joint is affected by several application-dependent factors, therefore the required torque for each application may be different. Refer to the ASME Pressure Vessel Code guidelines for bolt tightening standards.

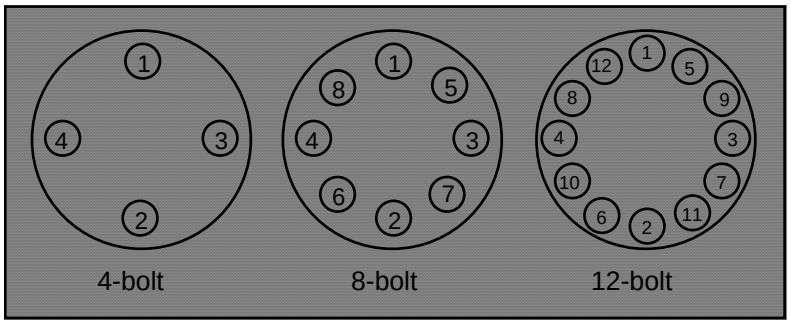

Figure 2-2. Flange Bolt Torquing Sequence

Wafer-Style Flow Meter Installation

Install the wafer-style meter between two conventional pipe flanges of the same nominal size as the flow meter. If the process fluid is a liquid, make sure the meter is located where the pipe is always full. This may require locating the meter at a low point in the piping system. Note: Vortex flow meters are not suitable for two-phase flows (i.e., liquid and gas mixtures). For horizontal pipelines having a process temperature above 300° F, mount the meter at a 45 or 90-degree angle to avoid overheating the electronics enclosure. To adjust the viewing angle of the enclosure or display/keypad, see page 2-18 and 2-19.

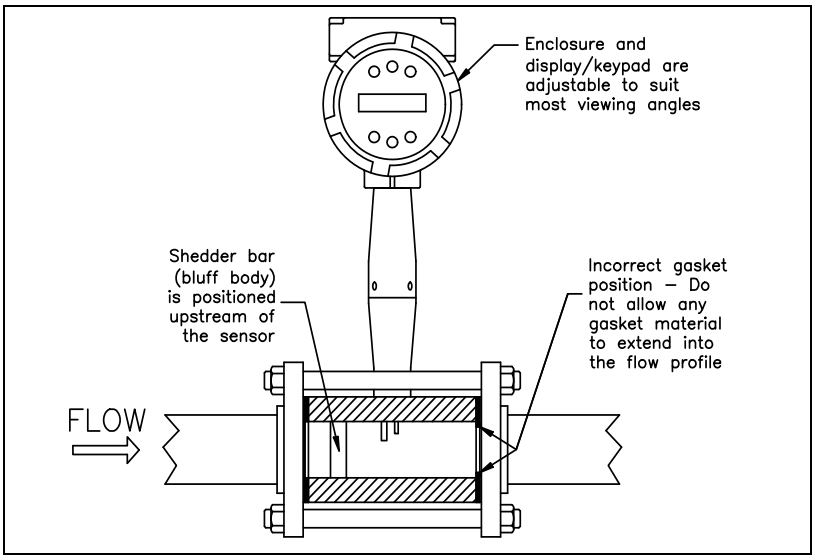

Figure 2-3. Wafer-Style Flow Meter Installation

Caution!
When using toxic or corrosive gases, purge the line with inert gas for a minimum of four hours at full gas flow before installing the flow meter.

When installing the meter make sure the section marked with a flow arrow is positioned upstream of the outlet, with the arrow head pointing in the direction of flow. (The mark is on the wafer adjacent to the enclosure mounting neck.) This ensures that the sensor head is positioned downstream of the vortex shedder bar and is correctly aligned to the flow. Installing the meter opposite this direction will result in completely inaccurate flow measurement. To install the meter:

1. Turn off the flow of process gas, liquid or steam. Verify that the line is not pressurized. Confirm that the installation site meets the required minimum upstream and downstream pipe diameters.

2. Insert the studs for the bottom side of the meter body between the pipe flanges. Place the wafer-style meter body between the flanges with the end stamped with a flow arrow on the upstream side, with the arrow head pointing in the direction of flow. Center the meter body inside the diameter with respect to the inside diameter of the adjoining piping.

3. Position the gasket material between the mating surfaces. Make sure both gaskets are smooth and even with no gasket material extending into the flow profile. Obstructions in the pipeline will disturb the flow and cause inaccurate measurements.

4. Place the remaining studs between the pipe flanges. Tighten the nuts in the sequence shown in Figure 2-2. Check for leaks after tightening the flange bolts

Flange-Style Flow Meter Installation

Install the flange-style meter between two conventional pipe flanges of the same nominal size as the flow meter. If the process fluid is a liquid, make sure the meter is located where the pipe is always full. This may require locating the meter at a low point in the piping system. Note: Vortex flow meters are not suitable for two-phase flows (i.e., liquid and gas mixtures). For horizontal pipelines having a process temperature above 300° F, mount the meter at a 45 or 90-degree angle to avoid overheating the electronics enclosure. To adjust the viewing angle of the enclosure or display/keypad, see page 2-18 and 2-19.

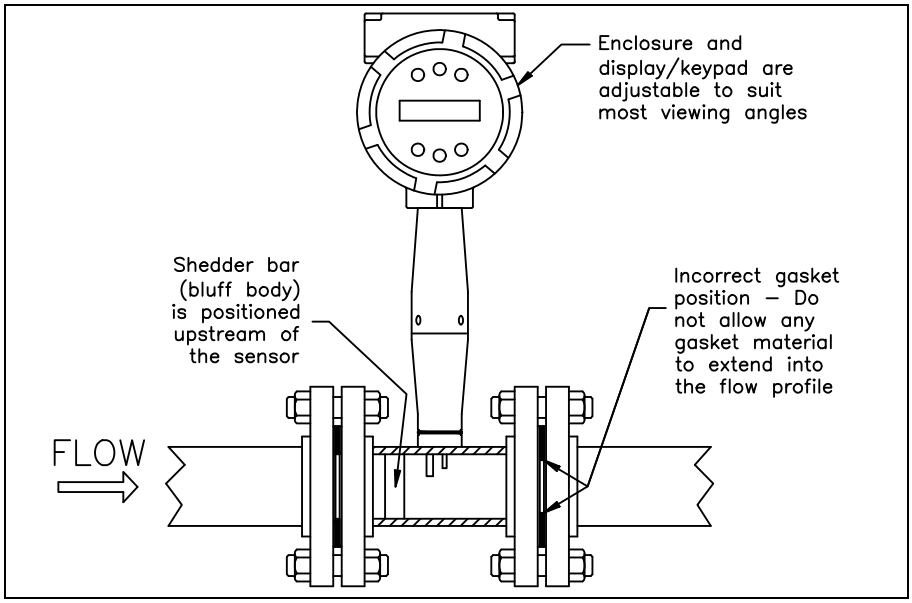

Figure 2-4. Flange-Style Flow Meter Installation

Caution!
When using toxic or corrosive gases, purge the line with inert gas for a minimum of four hours at full gas flow before installing the flow meter.

When installing the meter make sure the flange marked with a flow arrow is positioned upstream of the outlet flange, with the arrow head pointing in the direction of flow. (The mark is on the flange adjacent to the enclosure mounting neck.) This ensures that the sensor head is positioned downstream of the vortex shedder bar and is correctly aligned to the flow. Installing the meter opposite this direction will result in completely inaccurate flow measurement. To install the meter:

1. Turn off the flow of process gas, liquid or steam. Verify that the line is not pressurized. Confirm that the installation site meets the required minimum upstream and downstream pipe diameters.

2. Seat the meter level and square on the mating connections with the flange stamped with a flow arrow on the upstream side, with the arrow head pointing in the direction of flow. Position a gasket in place for each side. Make sure both gaskets are smooth and even with no gasket material extending into the flow profile. Obstructions in the pipeline will disturb the flow and cause inaccurate measurements.

3. Install bolts in both process connections. Tighten the nuts in the sequence shown in Figure 2-2. Check for leaks after tightening the flange bolts.

Series 241 Insertion Flow Meter Installation

Prepare the pipeline for installation using either a cold tap or hot tap method described on the following pages. Refer to a standard code for all pipe tapping operations. The following tapping instructions are general in nature and intended for guideline purposes only. Before installing the meter, review the mounting position and isolation value requirements given below.

Mounting Position

Allow clearance between the electronics enclosure top and any other obstruction when the meter is fully retracted.

Isolation Valve Selection

An isolation valve is available as an option with Series 241 meters. If you supply the isolation valve, it must meet the following requirements:

1. A minimum valve bore diameter of 1.875 inches is required, and the valve's body size should be two inches. Normally, gate valves are used.

2. Verify that the valve's body and flange rating are within the flow meter's maximum operating pressure and temperature.

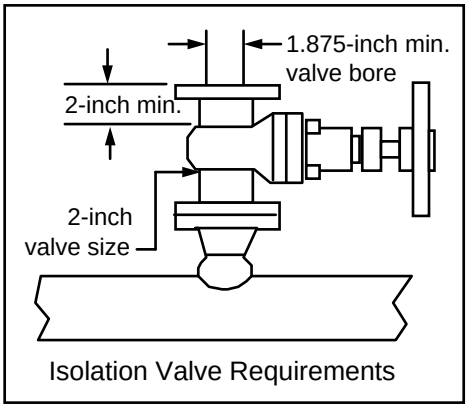

Isolation Valve Requirements

3. Choose an isolation valve with at least two inches existing between the flange face and the gate portion of the valve. This ensures that the flow meter's sensor head will not interfere with the operation of the isolation valve.

Cold Tap Guidelines

Refer to a standard code for all pipe tapping operations. The following tapping instructions are general in nature and intended for guideline purposes only.

Caution!
When using toxic or corrosive gases, purge the line with inert gas for a minimum of four hours at full gas flow before installing the flow meter.

1. Turn off the flow of process gas, liquid or steam. Verify that the line is not pressurized.

2. Confirm that the installation site meets the minimum upstream and downstream pipe diameter requirements. See Figure 2-1.

3. Use a cutting torch or sharp cutting tool to tap into the pipe. The pipe opening must be at least 1.875 inches in diameter. (Do not attempt to insert the sensor probe through a smaller hole.)

4. Remove all burrs from the tap. Rough edges may cause flow profile distortions that could affect flow meter accuracy. Also, obstructions could damage the sensor assembly when inserting into the pipe.

5. After cutting, measure the thickness of the cut-out and record this number for calculating the insertion depth.

Warning!
All flow meter connections, isolation valves and fittings for cold tapping must have the same or higher pressure rating as the main pipeline.

6. Weld the flow meter pipe connection on the pipe. Make sure this connection is within ± 5° perpendicular to the pipe centerline.

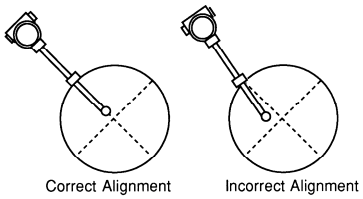

7. Install the isolation valve (if used).

8. When welding is complete and all fittings are installed, close the isolation valve or cap the line. Run a static pressure check on the welds. If pressure loss or leaks are detected, repair the joint and retest.

9. Connect the meter to the pipe process connection.

10. Calculate the sensor probe insertion depth and insert the sensor probe into the pipe as described on the following pages.

Hot Tap Guidelines

Refer to a standard code for all pipe tapping operations. The following tapping instructions are general in nature and intended for guideline purposes only.

Warning!
Hot tapping must be performed by a trained professional. US. regulations often require a hot tap permit. The manufacturer of the hot tap equipment and/or the contractor performing the hot tap is responsible for providing proof of such a permit.

1. Confirm that the installation site meets the minimum upstream and downstream pipe diameter requirements.

2. Weld a two inch mounting adapter on the pipe. Make sure the mounting adapter is within ± 5° perpendicular to the pipe centerline (see previous page). The pipe opening must be at least 1.875 inches in diameter.

3. Connect a two inch process connection on the mounting adapter.

4. Connect an isolation valve on the process connection. The valve's full open bore must be at least 1.875 inches in diameter.

Warning!
All flow meter connections, isolation valves, and fittings for hot tapping must have the same or higher pressure rating as the main pipeline.

5. Run a static pressure check on the welds. If pressure loss or leaks are detected, repair the joint and re-test.

6. Connect the hot tapping equipment to the isolation valve, open the isolation valve and drill at least a 1.875 inch diameter hole.

7. Retract the drill, close the isolation valve, and remove the hot tapping equipment.

8. Connect the flow meter to the isolation valve and open the isolation valve.

9. Calculate the sensor probe insertion depth and insert the sensor probe into the pipe as described on the following pages.

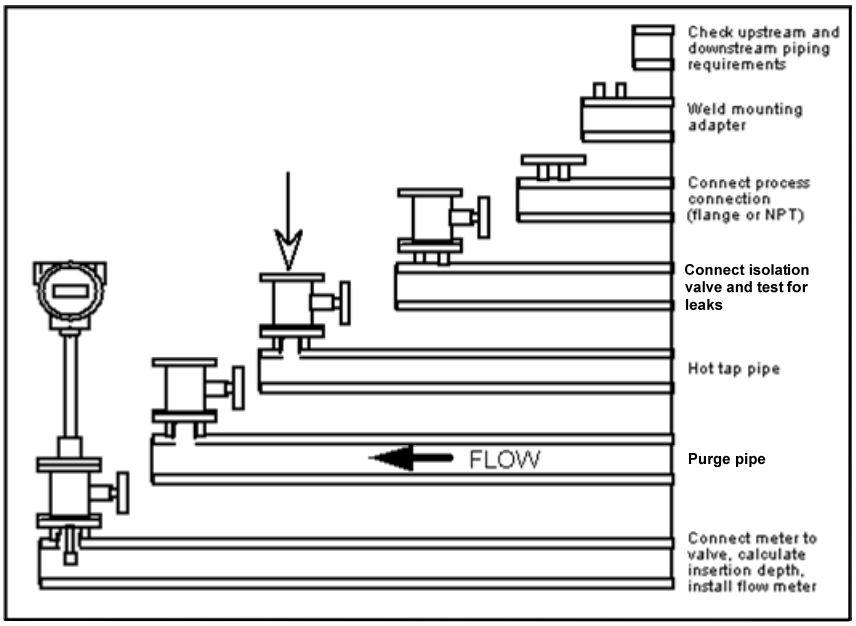

Figure 2-5. Hot Tap Sequence

Flow Meter Insertion

The sensor head must be properly positioned in the pipe. For this reason, it is important that insertion length calculations are carefully followed. A sensor probe inserted at the wrong depth in the pipe will result in inaccurate readings.

Insertion flow meters are applicable to pipes 2 inch and larger. For pipe sizes ten inches and smaller, the centerline of the meter's sensing head is located at the pipe's centerline. For pipe sizes larger than ten inches, the centerline of the sensing head is located in the pipe's cross section five inches from the inner wall of the pipe; i.e., its "wetted" depth from the wall to the centerline of the sensing head is five inches.

Insertion flow meters are available in three probe lengths:

Standard Probe configuration is used with most flow meter process connections. The length, S, of the stem is 29.47 inches.

Compact Probe configuration is used with compression fitting process connections. The length, S, of the stem is 13.1 inches.

12-Inch Extended Probe configuration is used with exceptionally lengthy flow meter process connections. The length, S, of the stem is 41.47 inches.

Use the Correct Insertion Formula

Depending on your flow meter's process connection, use the applicable insertion length formula and installation procedure as follows:

- Flow meters with a compression type connection (NPT or flanged) follow the instructions beginning on page 2-11.
- Flow meters with a packing gland type connection (NPT or flanged) configured with an insertion tool, follow the instructions beginning on page 2-13.
- Flow meters with a packing gland type connection (NPT or flanged) without an insertion tool, follow the instructions beginning on page 2-16.

Warning!
An insertion tool must be used for any installation where a flow meter is inserted under pressure greater than 50 psig.

*Installing Flow Meters with a Compression Connection**

Use the following formula to determine insertion length for flow meters (NPT and flanged) with a compression process connection. The installation procedure is given on the next page.

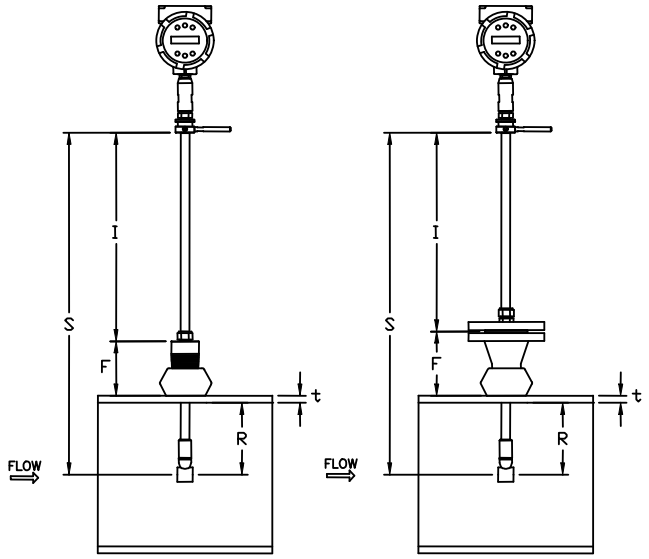

Insertion Length Formula

I = S – F – R – t

Where:

I = Insertion length.

S = Stem length – the distance from the center of the sensor head to the base of the enclosure adapter (S = 29.47 inches for standard probes; S = 13.1 inches for compact; S = 41.47 inches for 12-inch extended).

F = Distance from the raised face of the flange or top of NPT stem housing to the outside of the pipe wall.

R = Pipe inside diameter ÷ 2 for pipes ten inches and smaller.

R = Five inches for pipe diameters larger than ten inches.

t = Thickness of the pipe wall. (Measure the disk cut-out from the tapping procedure or check a piping handbook for thickness.)

Figure 2-6. Insertion Calculation (Compression Type)

Example:

To install a Series 241 meter with a standard probe (S = 29.47 inches) into a 14 inch schedule 40 pipe, the following measurements are taken:

F=3 inches
R=5 inches
t=0.438 inches

The insertion length for this example is 21.03 inches. Insert the stem through the fitting until an insertion length of 21.03 inches is measured with a ruler.

**All dimensions are in inches*

Insertion Procedure for Meters with a Compression Connection

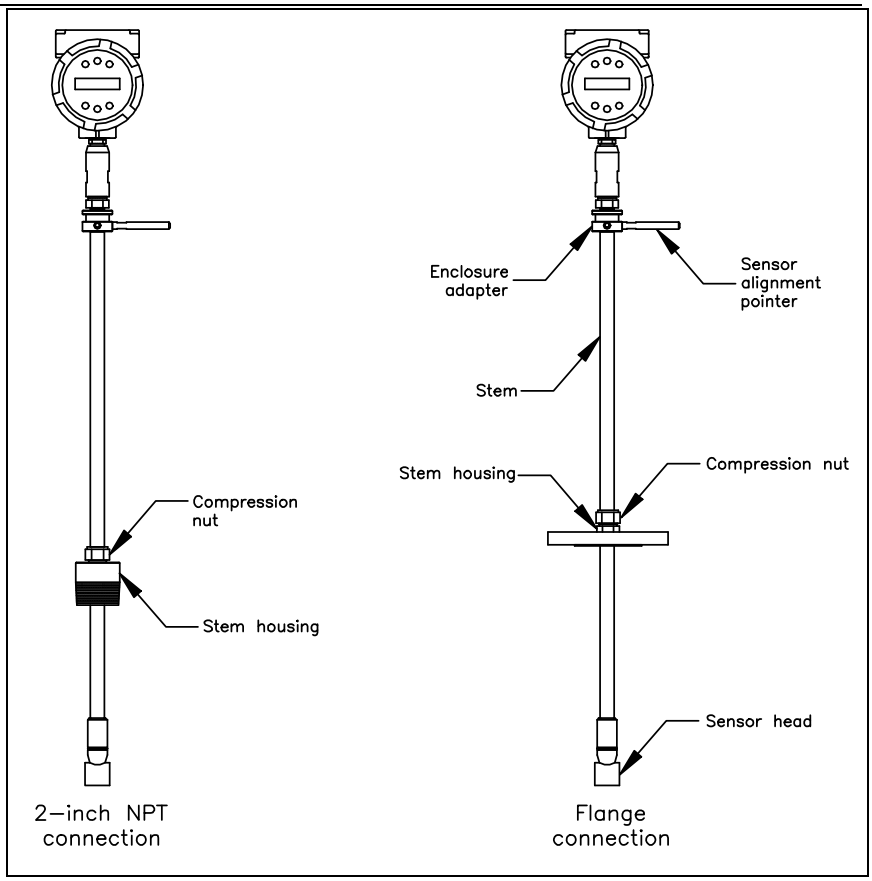

Figure 2-7. Flow Meter with Compression Type Fitting

Caution!
The sensor alignment pointer must point downstream, in the direction of flow.

Warning!
To avoid serious injury, DO NOT loosen the compression fitting under pressure.

1. Calculate the required sensor probe insertion length.

2. Fully retract the stem until the sensor head is touching the bottom of the stem housing. Slightly tighten the compression nut to prevent slippage.

3. Bolt or screw the flow meter assembly into the process connection. Use Teflon tape or pipe sealant to improve the seal and prevent seizing on NPT styles.

4. Hold the meter securely while loosening the compression fitting. Insert the sensor into the pipe until the calculated insertion length, I, is measured between the base of the enclosure adapter and the top of the stem housing, or to the raised face of the flanged version. Do not force the stem into the pipe.

5. Align the sensor head using the sensor alignment pointer. Adjust the alignment pointer parallel to the pipe and pointing downstream.

6. Tighten the compression fitting to lock the stem in position. **When the compression fitting is tightened, the position is permanent.**

*Installing Flow Meters with a Packing Gland Connection**

Use the formula below to determine the insertion depth for flow meters (NPT and flanged) equipped with an insertion tool. To install, see the next page for instructions for meters with a permanent insertion tool. For meters with a removable insertion tool, see page 2-15.

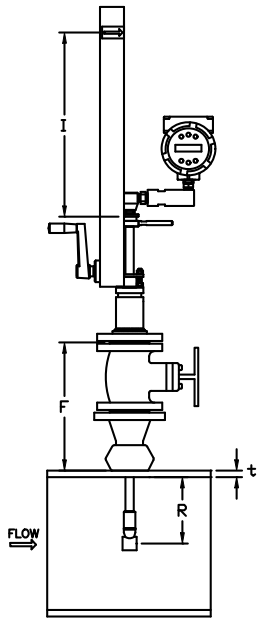

Insertion Length Formula

$$I = F + R + t - 1.35$$

Where:

I = Insertion length.

F = Distance from the raised face of the flange or top of the process connection for NPT style meters to the top outside of the process pipe.

R = Pipe inside diameter ÷ 2 for pipes ten inches & smaller.

R = Five inches for pipe diameters larger than ten inches.

t = Thickness of the pipe wall. (Measure the disk cutout from the tapping procedure or check a piping handbook for thickness.)

Figure 2-8. Insertion Calculation (Meters with Insertion Tool)

Example 1: Flange Style Meters:

To install a Series 241 Flow Meter into a 14 inch schedule 40 pipe, the following measurements are taken:

F = 12 inches
R = 5 inches
t = 0.438 inches

The example insertion length is 16.09 inches.

Example 2: NPT Style Meters:

The length of thread engagement on the NPT style meters is also subtracted in the equation. The length of the threaded portion of the NPT meter is 1.18 inches. Measure the thread portion still showing after the installation and subtract that amount from 1.18 inches. This gives you the thread engagement length. If this cannot be measured use .55 inch for this amount.

F = 12 inches
R = 5 inches
t = 0.438 inches

The example insertion length is 15.54 inches.

**All dimensions are in inches.*

Insertion Procedure for Flow Meters with Permanent Insertion Tool

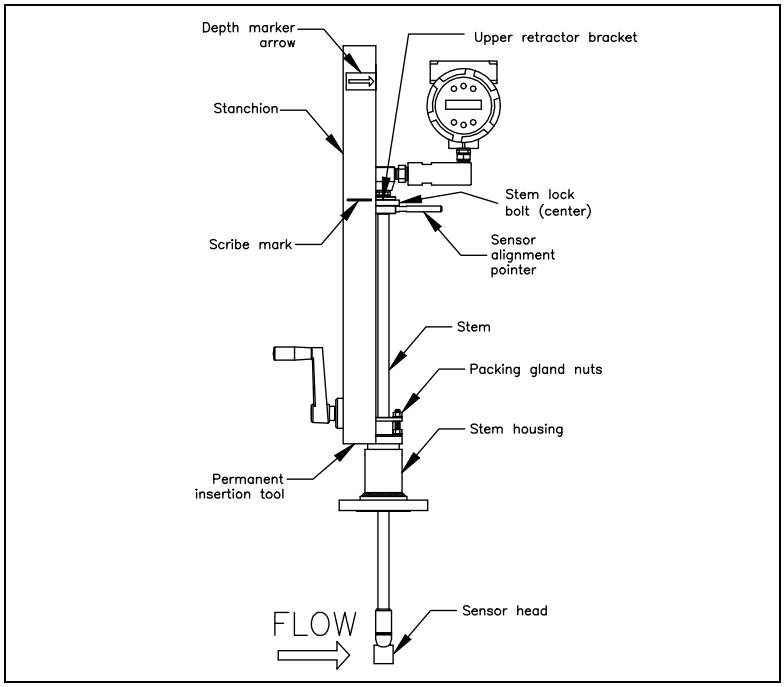

Figure 2-9. Flow Meter with Permanent Insertion Tool

Caution!
The sensor alignment pointer must point downstream, in the direction of flow.

1. Calculate the required sensor probe insertion length (see previous page). Measure from the depth marker arrow down the stanchion and scribe a mark at the calculated insertion depth.

2. Fully retract the flow meter until the sensor head is touching the bottom of the stem housing. Attach the meter assembly to the two inch full-port isolation valve, if used. Use Teflon tape or pipe sealant to improve seal and prevent seizing on NPT style.

Note
If line pressure is above 500 psig, it could require up to 25 ft lb of torque to insert the flow meter. Do not confuse this with possible interference in the pipe.

3. Loosen the two packing gland nuts on the stem housing of the meter. Loosen the stem lock bolt adjacent to the sensor alignment pointer. Align the sensor head using the sensor alignment pointer. Adjust the alignment pointer parallel to the pipe and pointing downstream. Tighten the stem lock bolt to secure the sensor position.

4. Slowly open the isolation valve to the full open position. If necessary, slightly tighten the two packing gland nuts to reduce the leakage around the stem.

5. Turn the insertion tool handle clockwise to insert the sensor head into the pipe. Continue until the top of the upper retractor bracket aligns with the insertion length position scribed on the stanchion. Do not force the stem into the pipe.
6. Tighten the packing gland nuts to stop leakage around the stem. Do not torque over 20 ft-lb.

Insertion Procedure for Flow Meters with Removable Insertion Tool

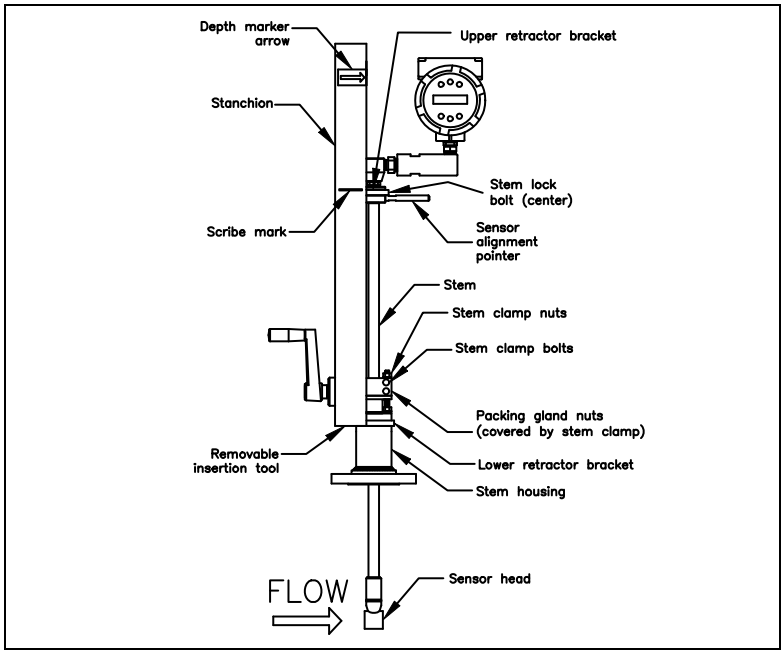

Figure 2-10. Flow Meter with Removable Insertion Tool

Caution!
The sensor alignment pointer must point downstream, in the direction of flow.

1. Calculate the required sensor probe insertion length. Measure from the depth marker arrow down the stanchion and scribe a mark at the calculated insertion depth.

2. Fully retract the flow meter until the sensor head is touching the bottom of the stem housing. Attach the meter assembly to the two inch full-port isolation valve, if used. Use Teflon tape or pipe sealant to improve seal and prevent seizing on NPT style.

3. Remove the two top stem clamp nuts and loosen two stem clamp bolts. Slide the stem clamp away to expose the packing gland nuts.

Note
If line pressure is above 500 psig, it could require up to 25 ft lb of torque to insert the flow meter. Do not confuse this with possible interference in the pipe.

4. Loosen the two packing gland nuts. Loosen the stem lock bolt adjacent to the sensor alignment pointer. Align the sensor head using the sensor alignment pointer. Adjust the alignment pointer parallel to the pipe and pointing downstream. Tighten the stem lock bolt to secure the sensor position.

5. Slowly open the isolation valve to the full open position. If necessary, slightly tighten the two packing gland nuts to reduce the leakage around the stem.

6. Turn the insertion tool handle clockwise to insert the stem into the pipe. Continue until the top of the upper retractor bracket lines up with the insertion length mark scribed on the stanchion. Do not force the stem into the pipe.

7. Tighten the packing gland nuts to stop leakage around the stem. Do not torque over 20 ft-lbs.

8. Slide the stem clamp back into position. Torque stem clamp bolts to 15 ft-lbs. Replace the stem clamp nuts and torque to 10-15 ft-lbs.

9. To separate the insertion tool from the flow meter, remove four socket head cap bolts securing the upper and lower retractor brackets. Remove the insertion tool.

*Installation of Meters with Packing Gland Connection (No Insertion Tool)**

Use the following formula to determine insertion depth for meters with a packing gland connection (NPT and flanged) without an insertion tool.

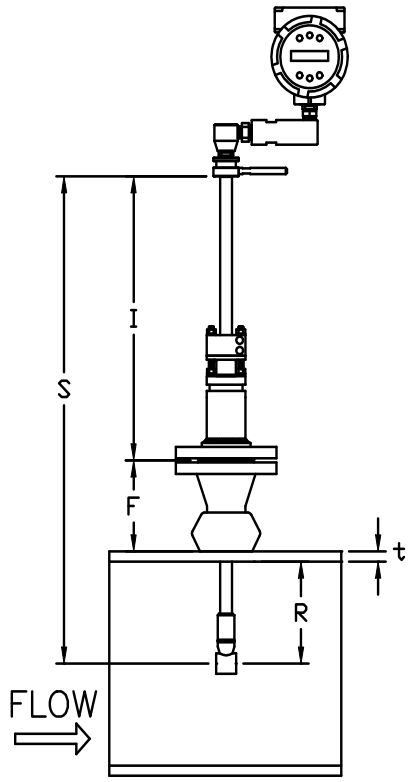

Insertion Length Formula

$$I = S - F - R - t$$

Where:

I = Insertion length.

S = Stem length – the distance from the center of the sensor head to the base of the enclosure adapter (S = 29.47 inches for standard probes; S = 41.47 inches for 12 inch extended probes).

F = Distance from the raised face of the flange or top of NPT stem housing to the outside of the pipe wall.

R = Pipe inside diameter ÷ 2 for pipes ten inches & smaller.

R = Five inches for pipe diameters larger than ten inches.

t = Thickness of the pipe wall. (Measure the disk cut-out from the tapping procedure or check a piping handbook for thickness.)

Figure 2-11. Insertion Calculation (Meters without Insertion Tool)

Example:

To install a Series 241 Flow Meter with a standard probe (S = 29.47) into a 14 inch schedule 40 pipe, the following measurements are taken:

F = 3 inches
R = 5 inches
t = 0.438 inches

The example insertion length is 21.03 inches.

**All dimensions are in inches.*

Insertion Procedure for Flow Meters with No Insertion Tool (Packing Gland Connection)

Warning!
The line pressure must be less than 50 psig for installation.

Caution!
The sensor alignment pointer must point downstream, in the direction of flow.

1. Calculate the required sensor probe insertion length.

2. Fully retract the stem until the sensor head is touching the bottom of the stem housing. Remove the two top stem clamp nuts and loosen two stem clamp bolts. Slide the stem clamp away to expose the packing gland nuts. Loosen the two packing gland nuts.

3. Align the sensor head using the sensor alignment pointer. Adjust the alignment pointer parallel to the pipe and pointing downstream.

4. Insert the sensor head into the pipe until insertion length, I, is achieved. Do not force the stem into the pipe.

5. Tighten the packing gland nuts to stop leakage around the stem. Do not torque over 20 ft-lbs.

6. Slide the stem clamp back into position. Torque stem clamp bolts to 15 ft-lbs. Replace the stem clamp nuts and torque to 10-15 ft-lbs.

Adjusting Meter Orientation

Depending on installation requirements, you may need to adjust the meter orientation. There are two adjustments available. The first rotates the position of the LCD display/keypad and is available on both in-line and insertion meters. The second is to rotate the enclosure position. This adjustment is only allowed on Series 240 In-Line meters.

Display/Keypad Adjustment (All Meters)

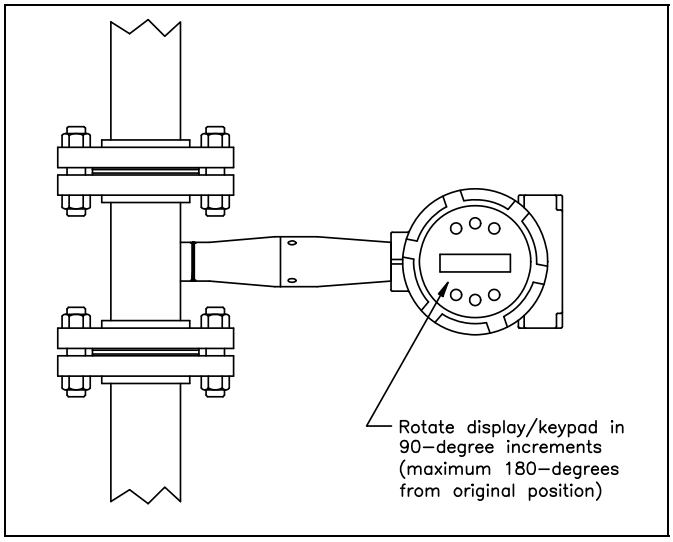

Figure 2-12. Display/Keypad Viewing Adjustment

The electronics boards are electrostatically sensitive. Wear a grounding wrist strap and make sure to observe proper handling precautions required for static-sensitive components. To adjust the display:

1. Disconnect power to the flow meter.
2. Loosen the small set screw which secures the electronics enclosure cover. Unscrew and remove the cover.
3. Loosen the 4 captive screws.
4. Carefully pull the display/microprocessor board away from the meter standoffs. Make sure not to damage the connected ribbon cable.
5. Rotate the display/microprocessor board to the desired position. Maximum turn, two positions left or two positions right (180-degrees).
6. Align the board with the captive screws. Check that the ribbon cable is folded neatly behind the board with no twists or crimps.
7. Tighten the screws. Replace the cover and set screw. Restore power to the meter.

Enclosure Adjustment (Series 240 Only)

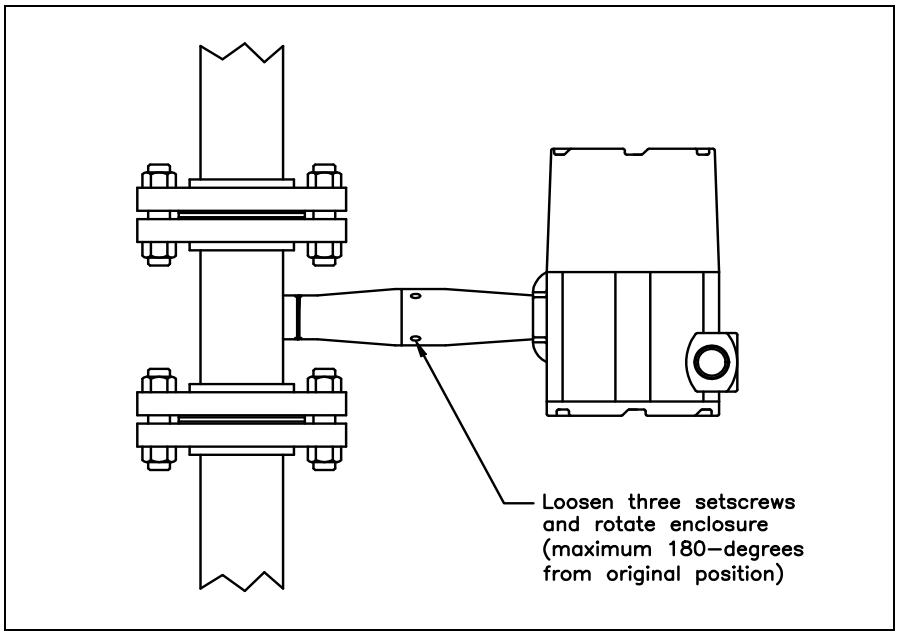

Figure 2-13. Enclosure Viewing Adjustment

To avoid damage to the sensor wires, do not rotate the enclosure beyond 180-degrees from the original position. To adjust the enclosure:

1. Remove power to the flow meter.

2. Loosen the three set screws shown above. Rotate the display to the desired position (maximum 180-degrees).

3. Tighten the three set screws. Restore power to the meter.

Loop Power Flow Meter Wiring Connections

Warning!
To avoid potential electric shock, follow National Electric Code safety practices or your local code when wiring this unit to a power source and to peripheral devices. Failure to do so could result in injury or death. All wiring procedures must be performed with the power off.

The NEMA 4X enclosure contains an integral wiring compartment with one dual strip terminal block (located in the smaller end of the enclosure). Two 3/4-inch female NPT conduit entries are available for separate power and signal wiring. For all hazardous area installations, make sure to use an agency-approved fitting at each conduit entry. If conduit seals are used, they must be installed within 18 inches (457 mm) of the enclosure.

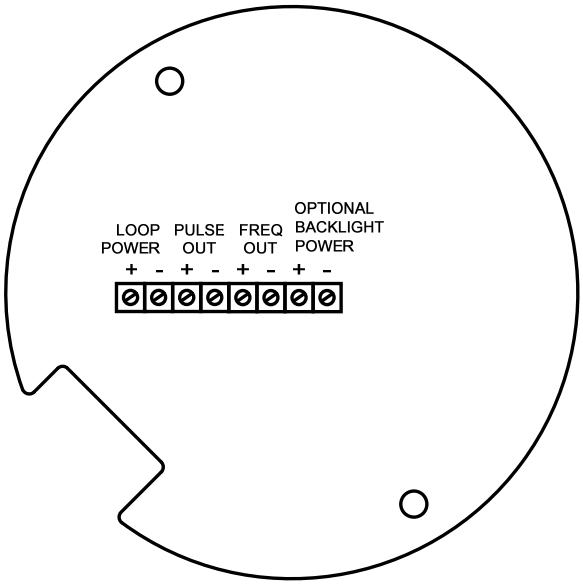

Figure 2-14. Loop Power Wiring Terminals

Input Power Connections

To access the wiring terminal blocks, locate and loosen the small set screw which locks the small enclosure cover in place. Unscrew the cover to expose the terminal block.

DC Power Wiring

Connect 4-20 mA loop power (12 to 36 VDC at 25 mA, 1W max.) to the +Loop Power and –Loop Power terminals on the terminal block. Torque all connections to 4.43 to 5.31 in-lbs (0.5 to 0.6 Nm). The DC power wire size must be 20 to 10 AWG with the wire stripped 1/4 inch (7 mm).

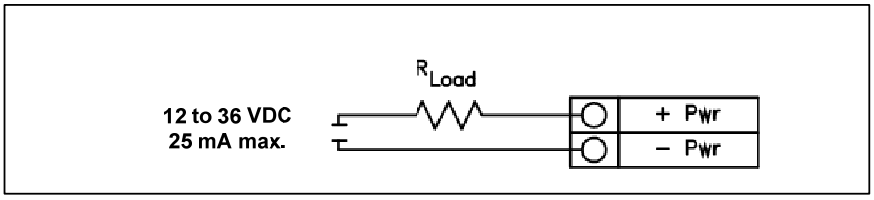

Figure 2-15. DC Power Connections

4-20 mA Output Connections

The Innova-Mass meter has a single 4-20 mA loop. The 4-20 mA loop current is controlled by the meter electronics. The electronics must be wired in series with the sense resistor or current meter. The current control electronics require 12 volts at the input terminals to operate correctly.

The maximum loop resistance (load) for the current loop output is dependent upon the supply voltage and is given in Figure 2-16. The 4-20 mA loop is optically isolated from the flow meter electronics.

R_{load} is the total resistance in the loop, including the wiring resistance ($R_{load} = R_{wire} + R_{sense}$). To calculate R_{max}, the maximum R_{load} for the loop, subtract the minimum terminal voltage from the supply voltage and divide by the maximum loop current, 20 mA. Thus:

The maximum resistance $R_{load} = R_{max} = (V_{supply} – 12V) / 0.020$ A

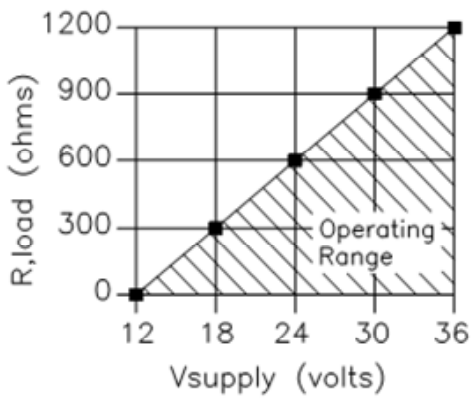

Vsupply (volts)	Rmax (ohms)
12	0
18	300
24	600
30	900
36	1200

Figure 2-16. Load Resistance Versus Input Voltage

Pulse Output Connections

The pulse output is used for a remote counter. When the preset volume or mass (defined in the totalizer settings, see page 3-10) has passed the meter, the output provides a 50 millisecond square pulse.

The pulse output requires a separate 5 to 36 VDC power supply. The pulse output optical relay is a normally-open single-pole relay. The relay has a nominal 200 volt/160 ohm rating. This means that it has a nominal on-resistance of 160 ohms, and the largest voltage that it can withstand across the output terminals is 200 volts. However, there are current and power specifications that must be observed. The relay can conduct a current up to 40 mA and can dissipate up to 320 mW. The relay output is isolated from the meter electronics and power supply.

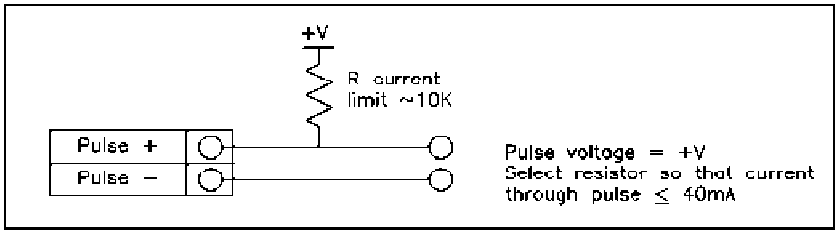

Figure 2-17. Isolated Pulse Output Using External Power Supply

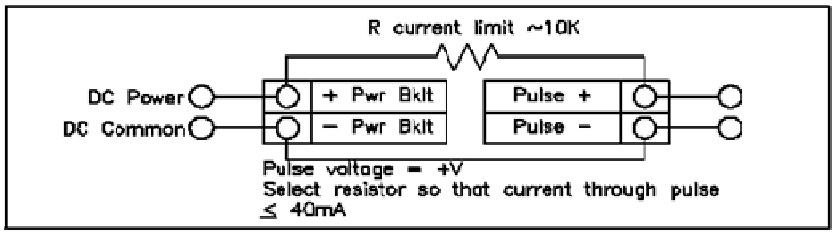

Figure 2-18. Non-Isolated Pulse Output Using External Power Supply

Frequency Output Connections

The frequency output is used for a remote counter. It can be scaled to output a 1 to 10 kHz signal proportional to mass or volume flow, temperature, pressure or density.

The frequency output requires a separate 5 to 36 VDC power supply; however, there are current and power specifications that must be observed. The output can conduct a current up to 40 mA and can dissipate up to 200 mW. The output is isolated from the meter electronics and power supply.

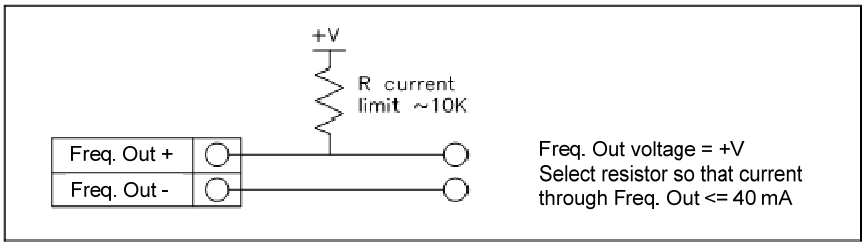

Figure 2-19. Isolated Frequency Output Using External Power Supply

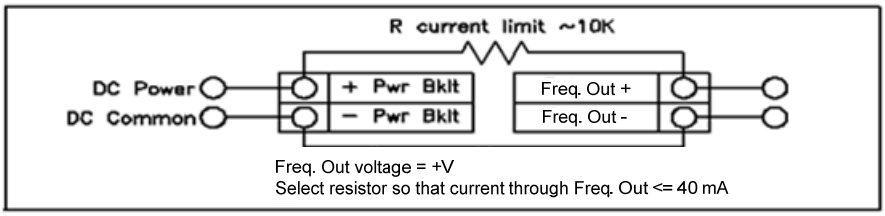

Figure 2-20. Non-Isolated Frequency Output Using External Power Supply

Optional Backlight Connection

The loop power meter has an optional backlight connection provided. It is intended to be powered by a separate 12 to 36 VDC at 35 mA max. power supply or by the pulse power input. Both options are shown below.

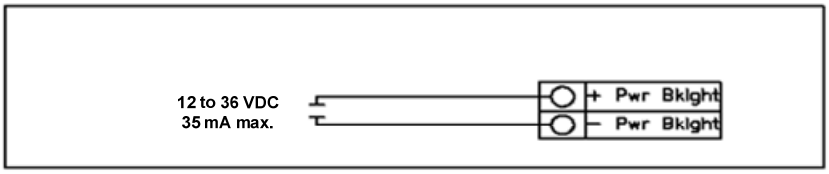

Figure 2-21.Backlight Using External Power Supply

Remote Electronics Wiring

The remote electronics enclosure should be mounted in a convenient, easy to reach location. For hazardous location installations, make sure to observe agency requirements for installation. Allow some slack in the interface cable between the junction box and the remote electronics enclosure. To prevent damage to the wiring connections, do not put stress on the terminations at any time.

The meter is shipped with temporary strain relief glands at each end of the cable. Disconnect the cable from the meter's terminal block inside the junction box–not at the remote electronics enclosure. Remove both glands and install appropriate conduit entry glands and conduit. When installation is complete, re-connect each labeled wire to the corresponding terminal position on the junction box terminal block. Make sure to connect each wire pair's shield. Note: incorrect connection will cause the meter to malfunction.

Note: Numeric code in junction box label matches wire labels.

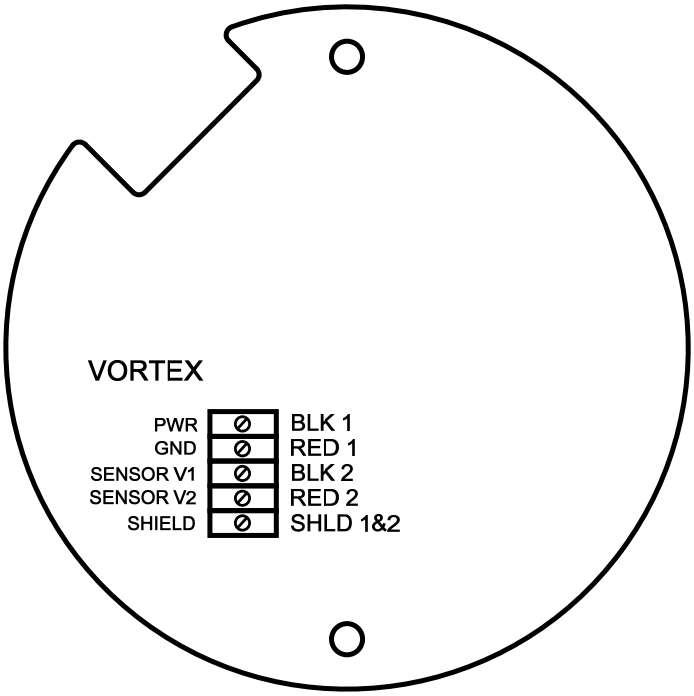

Figure 2-22. Loop Power Volumetric Flowmeter Junction Box Sensor Connections

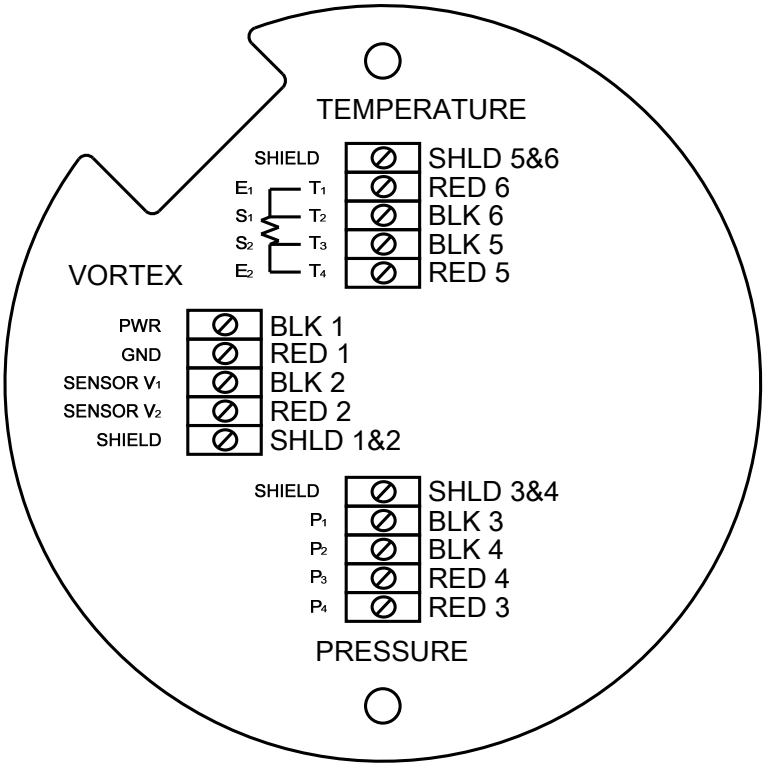

Figure 2-23. Loop Power Mass Flowmeter Junction Box Sensor Connections

High Power Meter Wiring Connections

Warning!
To avoid potential electric shock, follow National Electric Code safety practices or your local code when wiring this unit to a power source and to peripheral devices. Failure to do so could result in injury or death. All AC power connections must be in accordance with published CE directives. All wiring procedures must be performed with the power off.

The NEMA 4X enclosure contains an integral wiring compartment with one dual strip terminal block (located in the smaller end of the enclosure). Two 3/4-inch female NPT conduit entries are available for separate power and signal wiring. For all hazardous area installations, make sure to use an agency-approved fitting at each conduit entry. If conduit seals are used, they must be installed within 18 inches (457 mm) of the enclosure.

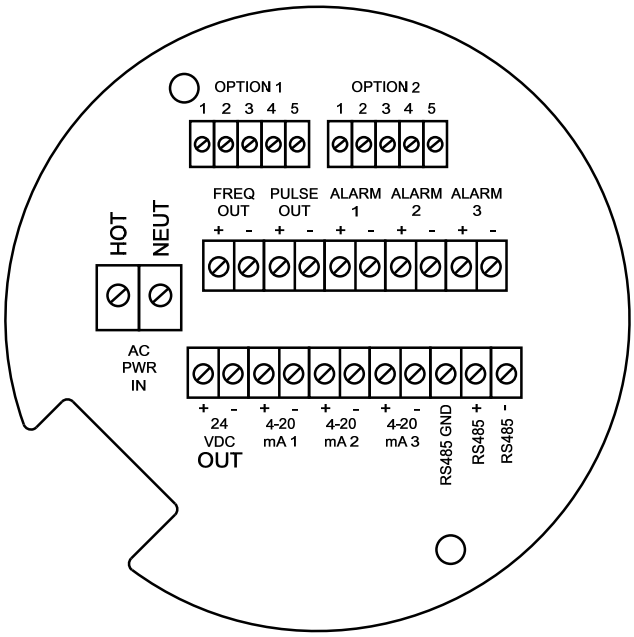

Figure 2-24. AC Wiring Terminals

Input Power Connections

To access the wiring terminal blocks, locate and loosen the small set screw which locks the small enclosure cover in place. Unscrew the cover to expose the terminal block.

AC Power Wiring

Caution!
The AC wire insulation temperature rating must meet or exceed 85°C (185°F).

The AC power wire size must be 20 to 10 AWG with the wire stripped 1/4 inch (7 mm). The wire insulation temperature must meet or exceed 85°C (185°F). Connect 100 to 240 VAC (5 W maximum) to the Hot and Neutral terminals on the terminal block. Connect the ground wire to the safety ground lug (⏚). Torque all connections to 4.43 to 5.31 in-lbs (0.5 to 0.6 Nm). Use a separate conduit entry for signal lines to reduce the possibility of AC noise interference.

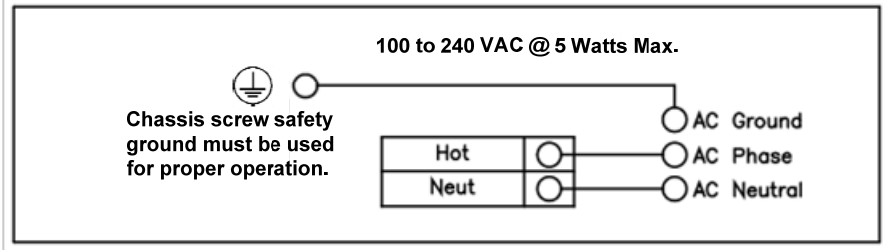

Figure 2-25. AC Power Connections

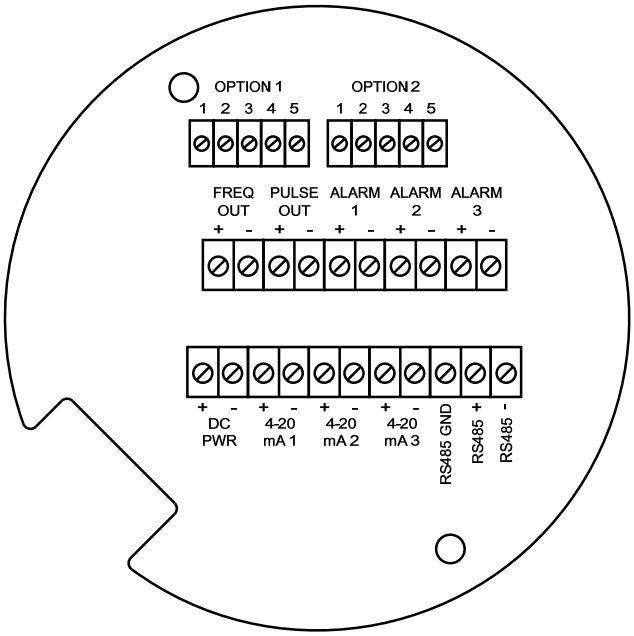

Figure 2-26. DC Wiring Terminals

DC Power Wiring

Caution!
The DC wire insulation temperature rating must meet or exceed 85°C (185°F).

The DC power wire size must be 20 to 10 AWG with the wire stripped 1/4 inch (7 mm). Connect 18 to 36 VDC (300 mA, 9 W maximum) to the +DC Pwr and –DC Pwr terminals on the terminal block.
Torque all connections to 4.43 to 5.31 in-lbs (0.5 to 0.6 Nm).

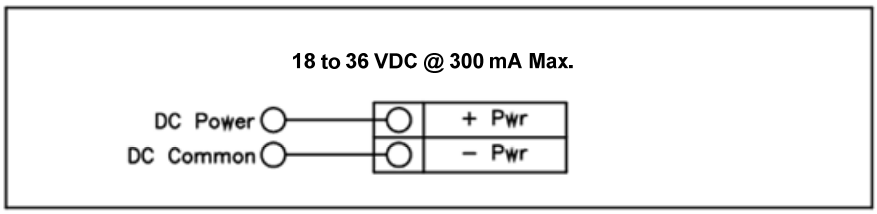

Figure 2-27. DC Power Connections

4-20 mA Output Connections

The standard Innova-Mass Flow Meter has a single 4-20 mA loop. Two additional loops are available on the optional communication board. The 4-20 mA loop current is controlled by the meter electronics. The electronics must be wired in series with the sense resistor or current meter. The current control electronics require 12 volts at the input terminals to operate correctly.

The maximum loop resistance (load) for the current loop output is dependent upon the supply voltage and is given in Figure 2-26. The 4-20 mA loop is optically isolated from the flow meter electronics.

R_{load} is the total resistance in the loop, including the wiring resistance ($R_{load} = R_{wire} + R_{sense}$). To calculate R_{max}, the maximum R_{load} for the loop, subtract the minimum terminal voltage from the supply voltage and divide by the maximum loop current, 20 mA. Thus:

The maximum resistance $R_{load} = R_{max} = (V_{supply} – 12V) / 0.020$ A

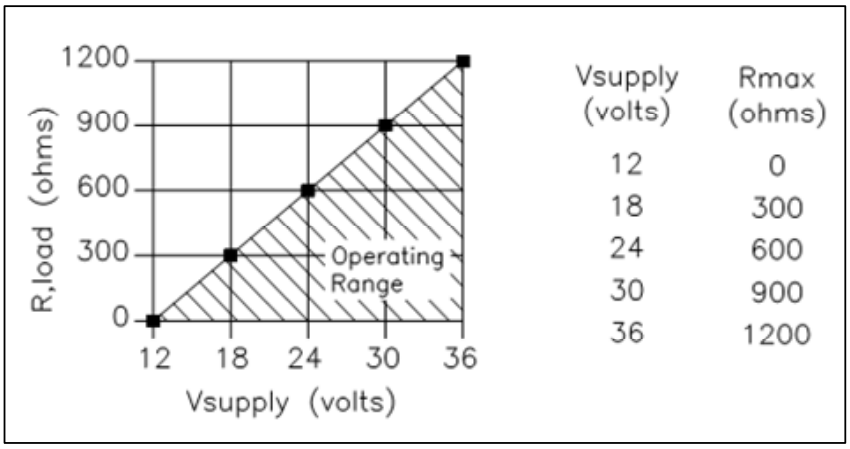

Figure 2-28. Load Resistance Versus Input Voltage

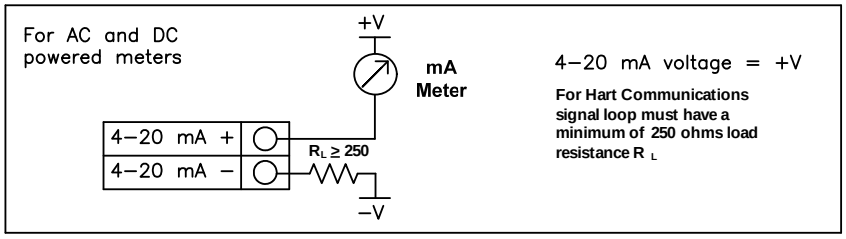

Figure 2-29. Isolated 4–20 mA Output Using External Power Supply

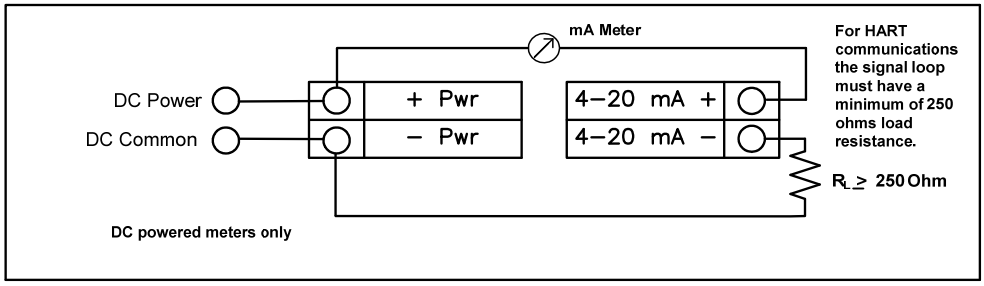

Figure 2-30. Non-Isolated 4–20 mA Output Using Meter Input Power Supply

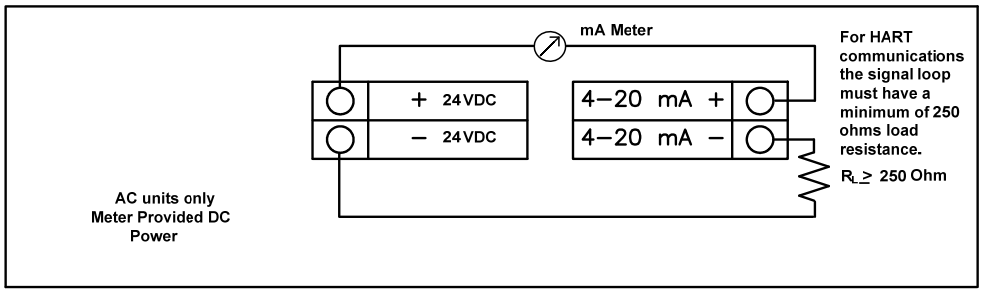

Figure 2-31. Isolated 4–20 mA Output Using Meter Provided Power Supply

Frequency Output Connections

The frequency output is used for a remote counter. It can be scaled to output a 1 to 10 kHz signal proportional to mass or volume flow, temperature, pressure or density.

The frequency output requires a separate 5 to 36 VDC power supply; however, there are current and power specifications that must be observed. The output can conduct a current up to 40 mA and can dissipate up to 200 mW. The output is isolated from the meter electronics and power supply.

There are three connection options for the frequency output–the first with a separate power supply (Figure 2-32), the second using the flow meter power supply (Figure 2-33)(DC powered units only), and the third using the internal 24 VDC power supply (Figure 2-34)(AC powered units only). Use the first option with a separate power supply (5 to 36 VDC) if a specific voltage is needed for the frequency output. Use the second configuration if the voltage at the flow meter power supply is an acceptable driver voltage for the load connected. (Take into account that the current used by the frequency load comes from the meter's power supply). Use the third configuration if you have an AC powered unit only. In any case, the voltage of the frequency output is the same as the voltage supplied to the circuit.

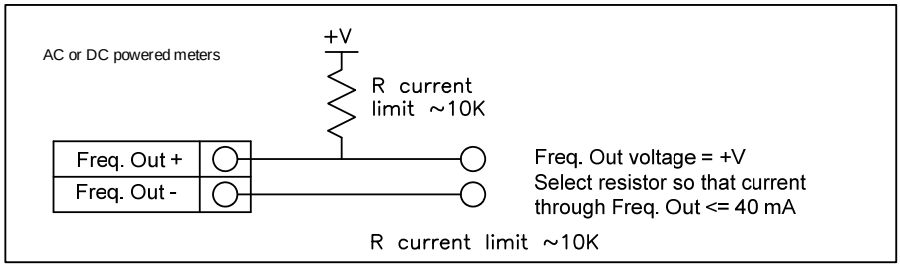

Figure 2-32. Isolated Frequency Output Using External Power Supply

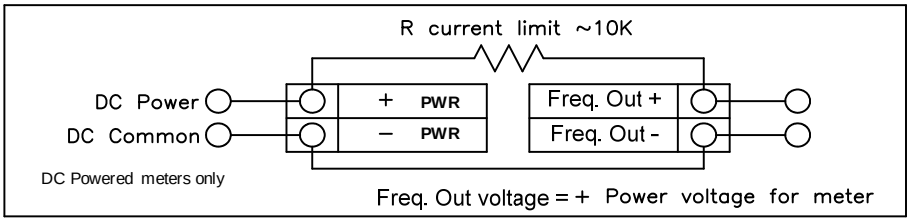

Figure 2-33. Non-Isolated Frequency Output Using Input Power Supply

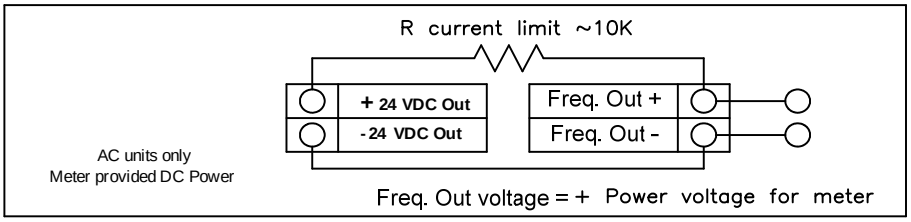

Figure 2-34. Isolated Frequency Output Using Meter Provided Power Supply

Pulse Output Connections

The pulse output is used for a remote counter. When the preset volume or mass (defined in the totalizer settings, see page 3-10) has passed the meter, the output provides a 50 millisecond square pulse.

The pulse output optical relay is a normally-open single-pole relay. The relay has a nominal 200 volt/160 ohm rating. This means that it has a nominal on-resistance of 160 ohms, and the largest voltage that it can withstand across the output terminals is 200 volts. However, there are current and power specifications that must be observed. The relay can conduct a current up to 40 mA and can dissipate up to 320 mW. The relay output is isolated from the meter electronics and power supply.

There are three connection options for the pulse output–the first with a separate power supply (Figure 2-30), the second using the flow meter power supply (Figure 2-31)(DC powered units only), and the third using the internal 24 VDC power supply (Figure 2-32)(AC powered units only). Use the first option with a separate power supply (5 to 36 VDC) if a specific voltage

is needed for the pulse output. Use the second configuration if the voltage at the flow meter power supply is an acceptable driver voltage for the load connected. (Take into account that the current used by the pulse load comes from the meter's power supply). Use the third configuration if you have an AC powered unit only. In any case, the voltage of the pulse output is the same as the voltage supplied to the circuit.

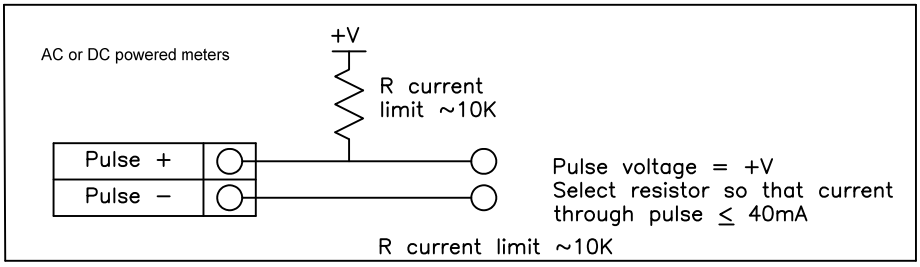

Figure 2-35. Isolated Pulse Output Using External Power Supply

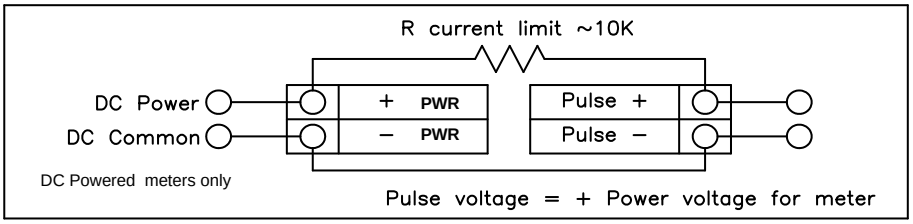

Figure 2-36. Non-Isolated Pulse Output Using Input Power Supply

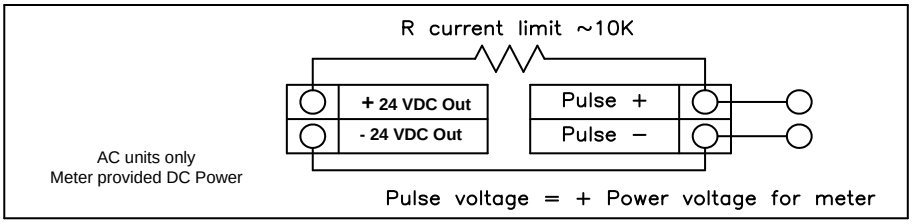

Figure 2-37. Isolated Pulse Output Using Meter Provided Power Supply

Alarm Output Connections

One alarm output (Alarm 1) is included on the standard Innova-Mass™ Flow Meter. Two or more alarms (Alarm 2 and Alarm 3) are included on the optional communication board. The alarm output optical relays are normally-open single-pole relays. The relays have a nominal 200 volt/160 ohm rating. This means that each relay has a nominal on-resistance of 160 ohms and the largest voltage that it can withstand across the output terminals is 200 volts. However, there are current and power specifications that must be observed. The relay can conduct a current up to 40 mA and can dissipate up to 320 mW. The relay output is isolated from the meter electronics and power supply. When the alarm relay is closed, the current draw will be constant. Make sure to size R_{load} appropriately.

There are three connection options for the alarm output–the first with a separate power supply (Figure 2-33), the second using the flow meter power supply (Figure 2-34)(DC powered units only) and the third with the meter provided power supply (Figure 2-35)(AC powered units only). Use the first option with a separate power supply (5 to 36 VDC) if a specific voltage is needed for the alarm output. Use the second configuration if the voltage at the flow meter power supply is an acceptable driver voltage for the load connected. (Take into account that the current used by the alarm load comes from the meter's power supply). Use the third if you have an AC powered unit only. In any case, the voltage of the alarm output is the same as the voltage supplied to the circuit.

The alarm output is used for transmitting high or low process conditions as defined in the alarm settings (see page 3-9).

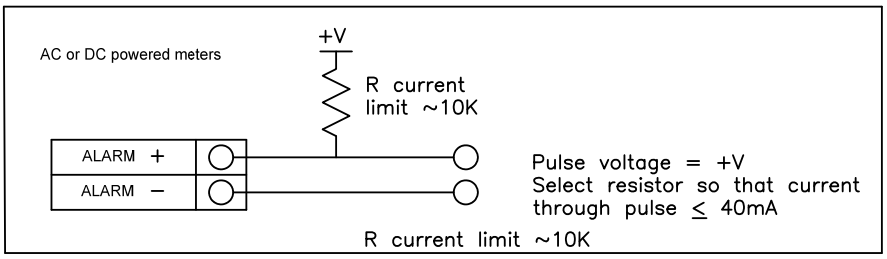

Figure 2-38. Isolated Alarm Output Using External Power Supply

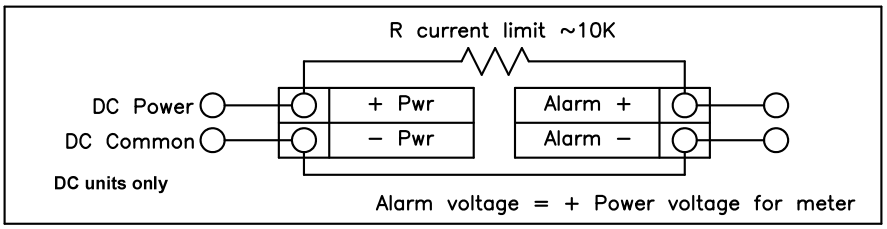

Figure 2-39. Non-Isolated Alarm Output Using Internal Power Supply

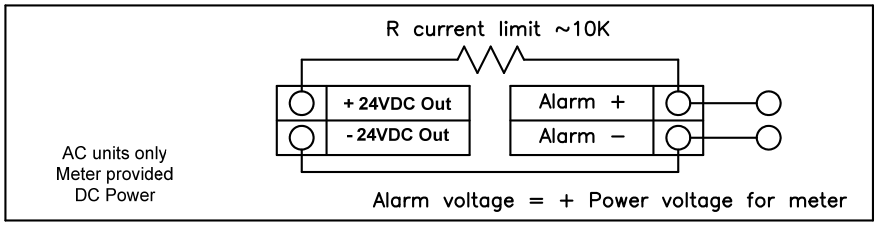

Figure 2-40. Isolated Alarm Output Using Meter Provided Power Supply

Remote Electronics Wiring

The remote electronics enclosure should be mounted in a convenient, easy to reach location. For hazardous location installations, make sure to observe agency requirements for installation. Allow some slack in the interface cable between the junction box and the remote electronics enclosure. To prevent damage to the wiring connections, do not put stress on the terminations at any time.

The meter is shipped with temporary strain relief glands at each end of the cable. Disconnect the cable from the meter's terminal block inside the junction box–not at the remote electronics enclosure. Remove both glands and install appropriate conduit entry glands and conduit. When installation is complete, re-connect each labeled wire to the corresponding terminal position on the junction box terminal block. Make sure to connect each wire pair's shield. Note: incorrect connection will cause the meter to malfunction.

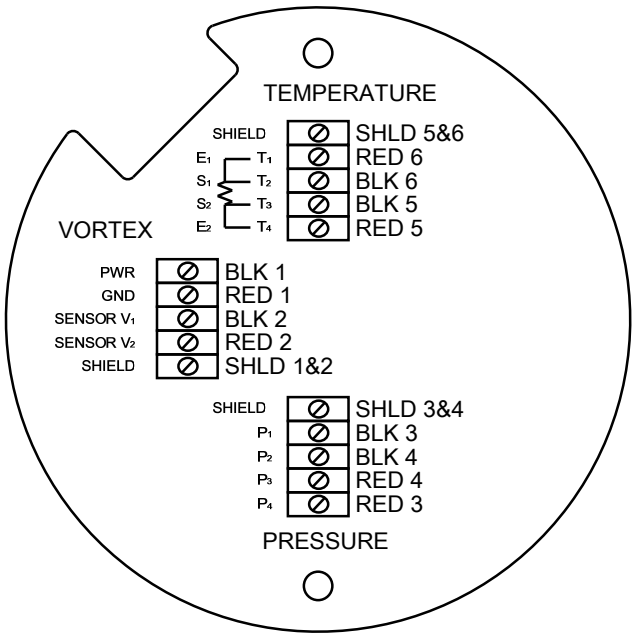

Figure 2-41. High Power Flow Meter Junction Box Sensor Connections

Note: Numeric code in junction box label matches wire labels.

Optional Input Electronics Wiring

The meter has two optional input wiring terminals. These can be used to input a Remote or Second RTD input in the case of an Energy Monitoring meter, for the input of a Remote Pressure Transducer, to pass a Contact Closure or for a Remote Density measurement to name a few. In any case, the wiring diagram will be included with the meter if any of the options are specified. Otherwise, the optional terminal blocks will be left blank and non functional.

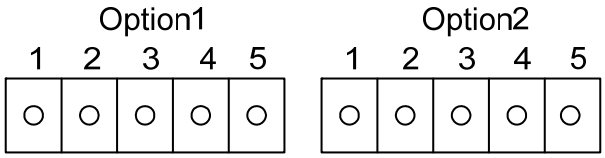

Optional Energy EMS RTD Input Wiring

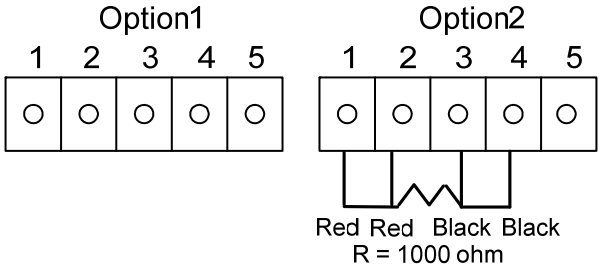

Figure 2-42.Optional Energy EMS RTD Input Wiring

The recommended customer supplied second RTD is a Class A 1000 ohm 4-wire platinum RTD. If a second RTD is not being used, then the factory supplied 1000 ohm resistor needs to be installed in its place.

Optional External 4-20 mA Input Wiring

The meter is set to have Option 1 used for the external input. Programming menus that pertain to the optional 4-20 mA input are located in the Hidden Diagnostics Menu in Chapter 5.

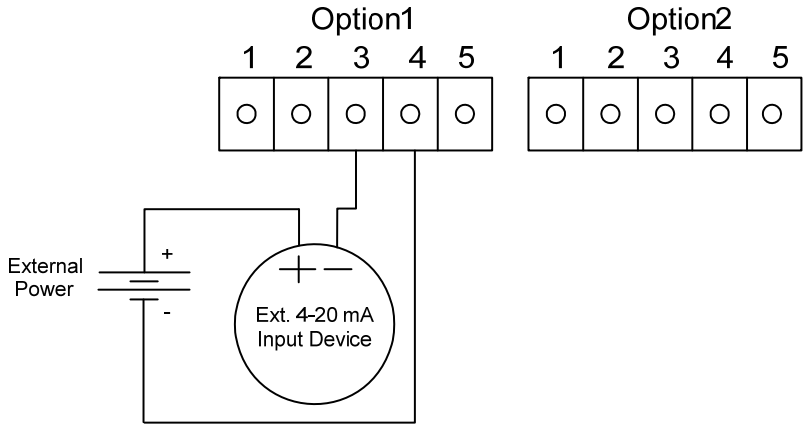

Figure 2-43. External 4-20 mA Input Wiring - External Power Supply

Follow the above diagram to wire the external 4-20 mA input into the flow meter using an external power supply.

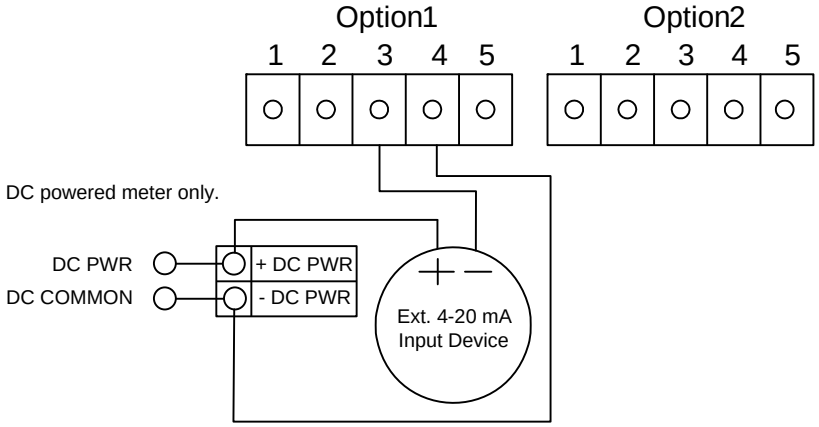

Figure 2-44. External 4-20 mA Input Wiring - DC Powered Meter

Follow the above diagram to wire the external 4-20 mA input into the flow meter using power supplied to the input of a DC powered meter.

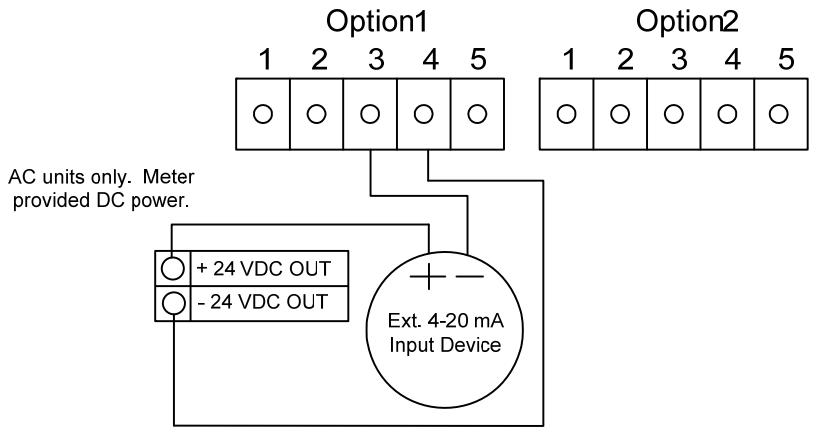

Figure 2-45. External 4-20 mA Input Wiring - AC Powered Meter

Follow the above diagram to wire the external 4-20 mA input into the flow meter using power from the 24 VDC output of an AC powered meter.

Optional Contact Closure Input Wiring

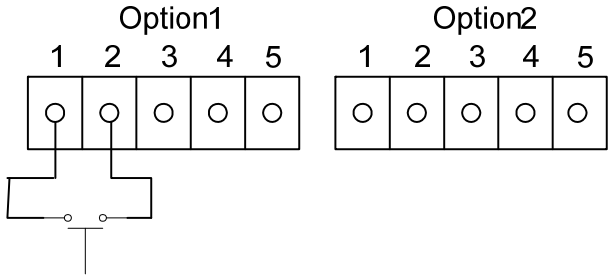

Figure 2-46. Optional Contact Closure Input Wiring

Follow the above diagram to wire an external switch input into the flow meter. The meter is configured to have Option 1 used for the external input. If the above switch is used to remotely reset the totalizer a pushbutton switch with a momentary contact closure is recommended.

Chapter 3 Operating Instructions

After installing the Innova-Mass Vortex Flow Meter, you are ready to begin operation. The sections in this chapter explain the display/keypad commands, meter start-up and programming. The meter is ready to operate at start up without any special programming. To enter parameters and system settings unique to your operation, see the following pages for instructions on using the setup menus.

Flow Meter Display/Keypad

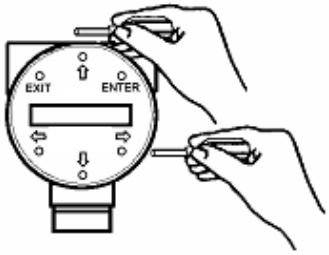

The flow meter's digital electronics allow you to set, adjust and monitor system parameters and performance. A full range of commands are available through the display/keypad. The LCD display gives 2 x 16 characters for flow monitoring and programming. The six push-buttons can be operated with the enclosure cover removed. Or, the explosion-proof cover can remain in place and the keypad operated with a hand-held magnet positioned at the side of the enclosure as shown in the illustration at the left.

Display/Keypad Commands

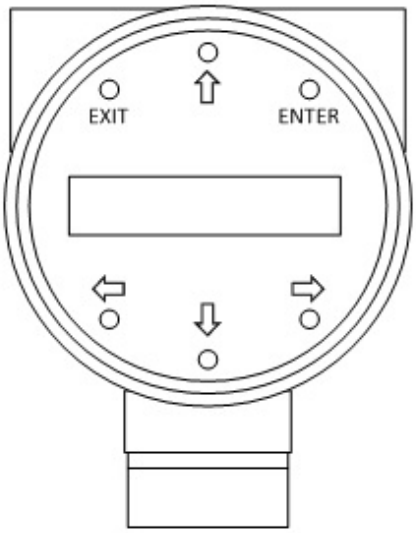

From the Run Mode, the **ENTER** key allows access to the Setup Menus (through a password screen). Within the Setup Menus, pressing **ENTER** activates the current field. To set new parameters, press the **ENTER** key until an underline cursor appears. Use the ⇧ ⇩ ⇦ ⇨ keys to select new parameters. Press **ENTER** to continue. (If change is not allowed, **ENTER** has no effect.) All outputs are disabled when using the Setup Menus.

The **EXIT** key is active within the Setup Menus. When using a Setup Menu, **EXIT** returns you to the Run Mode. If you are changing a parameter and make a mistake, **EXIT** allows you to start over.

The ⇧ ⇩ ⇦ ⇨ keys advance through each screen of the current menu. When changing a system parameter, all ⇧ ⇩ ⇦ ⇨ keys are available to enter new parameters.

Figure 3-1. Flow Meter Display/Keypad

Start-Up

To begin flow meter operation:

Note
Starting the flow meter or pressing EXIT will always display the Run Mode screens.

1. Verify the flow meter is installed and wired as described in Chapter 2.
2. Apply power to the meter. At start up, the unit runs a series of self-tests that check the RAM, ROM, EPROM and all flow sensing components. After completing the self-test sequence, the Run Mode screens appear.
3. The Run Mode displays flow information as determined by system settings. Some screens depicted on the next page may not be displayed based on these settings. Press the ⇧⇩ arrow keys to view the Run Mode screens.
4. Press the ENTER key from any Run Mode screen to access the Setup Menus. Use the Setup Menus to configure the meter's multi-parameter features to fit your application.

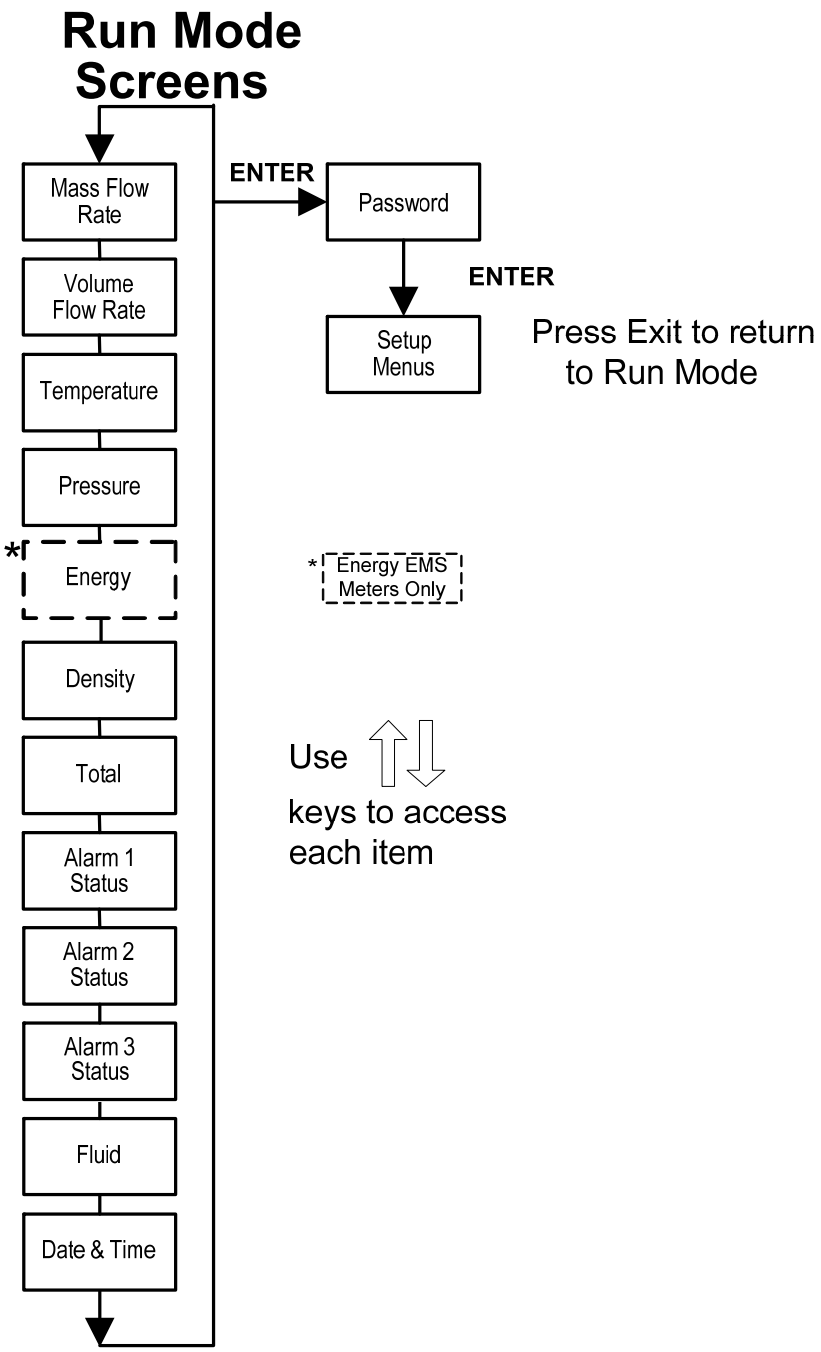
Run Mode Screens
Mass Flow Rate
Volume Flow Rate
Temperature
Pressure
*
Energy
Density
Total
Alarm 1 Status
Alarm 2 Status
Alarm 3 Status
Fluid
Date & Time
ENTER
Password
ENTER
Setup Menus
Press Exit to return to Run Mode
* Energy EMS Meters Only
Use
keys to access each item

Using the Setup Menus

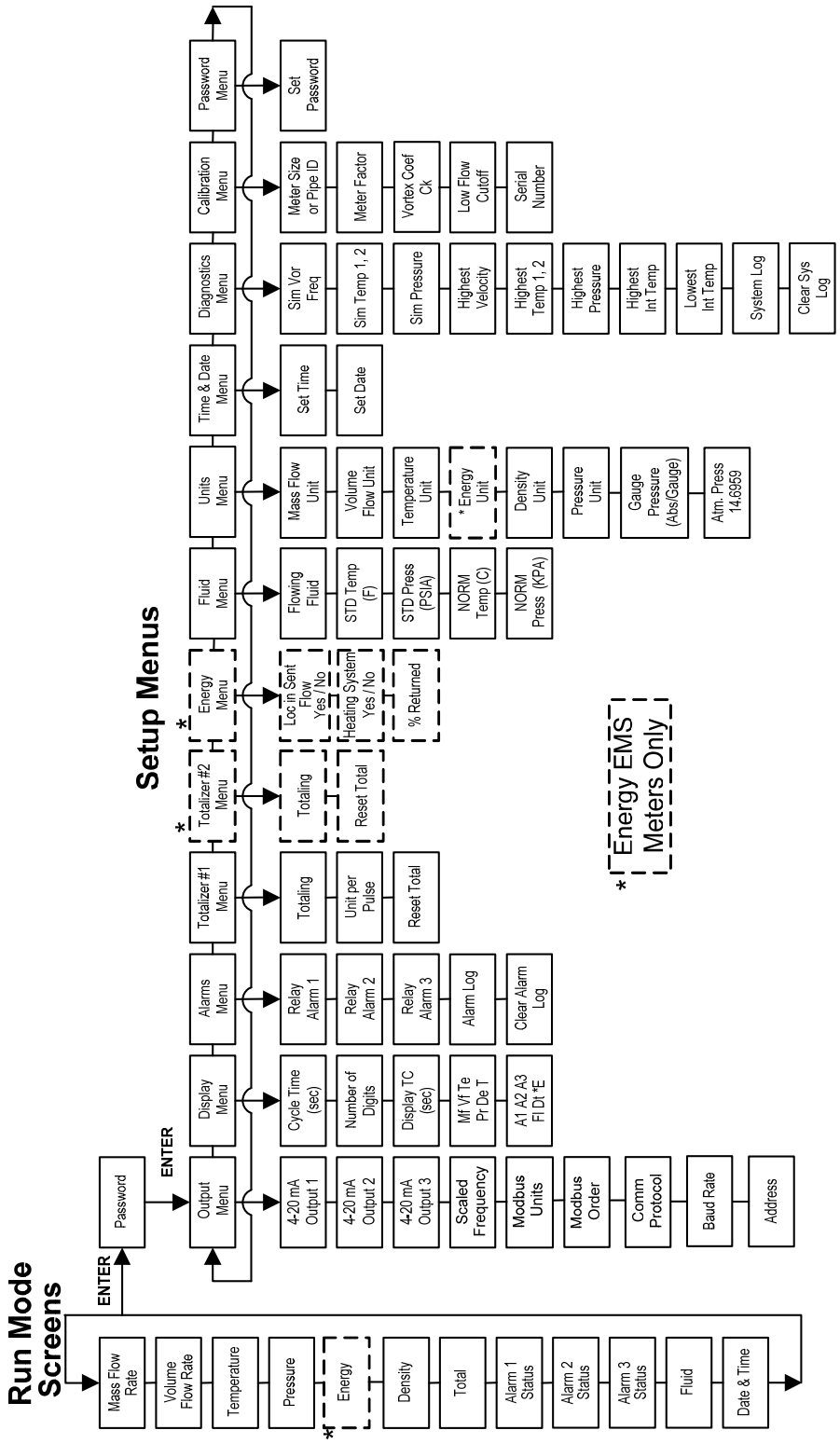

Programming the Flow Meter

1. Enter the Setup Menu by pressing the ENTER key until prompted for a password. (All outputs are disabled while using the Setup Menus.)

2. Use the ⇧⇩⇦⇨ keys to select the password characters (1234 is the factory-set password). When the password is correctly displayed, press ENTER to continue.

3. Use the Setup Menus described on the following pages to customize the multi-parameter features of your Innova-Mass Flow Meter. (The entire lower display line is available for entering parameters.) Some items depicted in the graphic on the preceding page may not be displayed based on flow meter configuration settings

4. To activate a parameter, press ENTER. Use the ⇧⇩⇦⇨ keys to make selections. Press ENTER to continue. Press EXIT to save or discard changes and return to Run Mode.

5. **Program the UNITS menu first because later menus will be based on the units selected.**

Output Menu

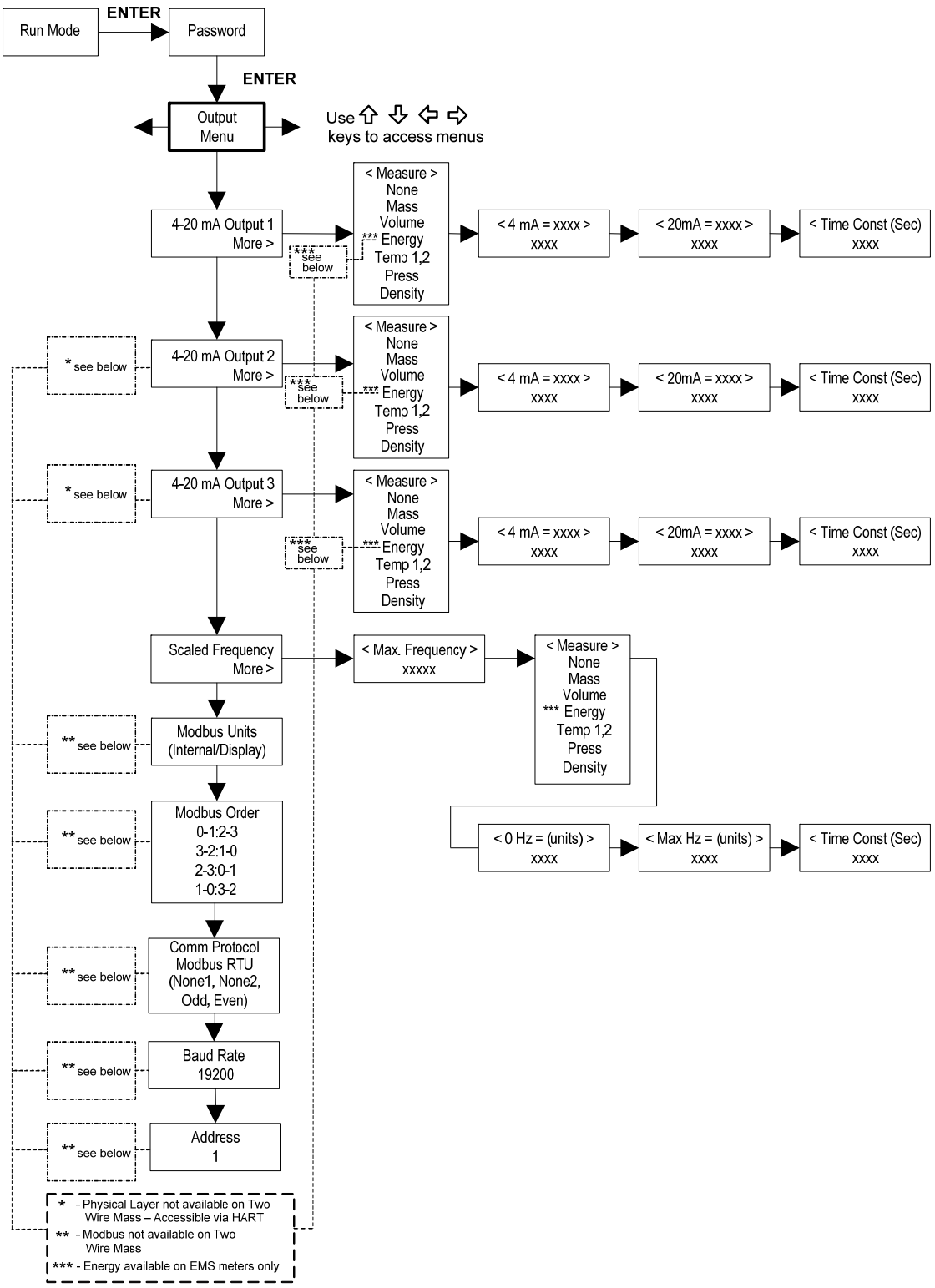
Run Mode
ENTER
Password
ENTER
Output Menu
Use ⇧ ⇩ ⇦ ⇨ keys to access menus
4-20 mA Output 1 More >
*** see below
< Measure > None Mass Volume *** Energy Temp 1,2 Press Density
< 4 mA = xxxx > xxxx
< 20mA = xxxx > xxxx
< Time Const (Sec) xxxx
* see below
4-20 mA Output 2 More >
*** see below
< Measure > None Mass Volume *** Energy Temp 1,2 Press Density
< 4 mA = xxxx > xxxx
< 20mA = xxxx > xxxx
< Time Const (Sec) xxxx
* see below
4-20 mA Output 3 More >
*** see below
< Measure > None Mass Volume *** Energy Temp 1,2 Press Density
< 4 mA = xxxx > xxxx
< 20mA = xxxx > xxxx
< Time Const (Sec) xxxx
Scaled Frequency More >
< Max. Frequency > xxxxx
< Measure > None Mass Volume *** Energy Temp 1,2 Press Density
< 0 Hz = (units) > xxxx
< Max Hz = (units) > xxxx
< Time Const (Sec) xxxx
** see below
Modbus Units (Internal/Display)
** see below
Modbus Order 0-1:2-3 3-2:1-0 2-3:0-1 1-0:3-2
** see below
Comm Protocol Modbus RTU (None1, None2, Odd, Even)
** see below
Baud Rate 19200
** see below
Address 1
* - Physical Layer not available on Two Wire Mass – Accessible via HART
** - Modbus not available on Two Wire Mass
*** - Energy available on EMS meters only

Example for Setting an Output

The following shows how to set Output 1 to measure mass flow with 4 mA = 0 lb/hr and 20 mA = 100 lb/hr with a time constant of 5 seconds. (All outputs are disabled while using the Setup Menus.)

First, set the desired units of measurement:

1. Use ⇦⇨ keys to move to the Units Menu (see page 3-12).
2. Press ⇩ key until Mass Flow Unit appears. Press ENTER.
3. Press ⇩ key until lb appears in the numerator. Press ⇨ key to move the underline cursor to the denominator. Press the ⇩ key until hr appears in the denominator. Press ENTER to select.
4. Press ⇧ key until Units Menu appears.

Second, set the analog output:

1. Use ⇦⇨ keys to move to the Output Menu.
2. Press the ⇩ key until 4-20 mA Output 1 appears.
3. Press ⇨ key to access Measure selections. Press ENTER and press the ⇩ key to select Mass. Press ENTER.
4. Press ⇨ key to set the 4 mA point in the units you have selected for mass of lb/hr. Press ENTER and use ⇧⇩⇦⇨ keys to set 0 or 0.0. Press ENTER.
5. Press ⇨ key to set the 20 mA point. Press ENTER and use ⇧⇩⇦⇨ keys to set 100 or 100.0. Press ENTER.
6. Press ⇨ key to select the Time Constant. Press ENTER and use ⇧⇩⇦⇨ keys to select 5. Press ENTER.
7. Press the EXIT key and answer YES to permanently save your changes.

Display Menu

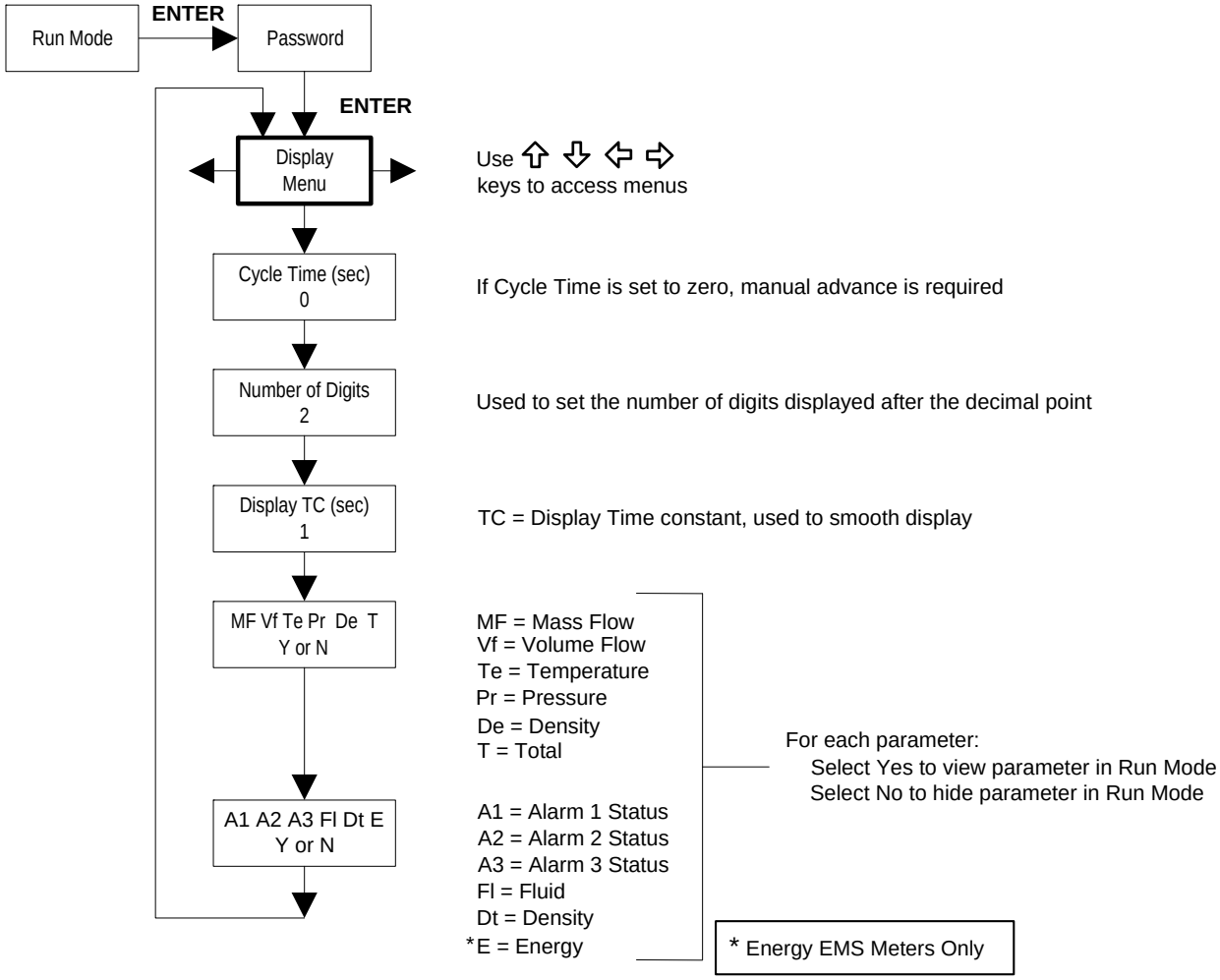

Use the Display Menu to set the cycle time for automatic screen sequencing used in the Run Mode, change the precision of displayed values, smooth the values or enable or disable each item displayed in the Run Mode screens.

Example for Changing a Run Mode Display Item

The following shows how to remove the temperature screen from the Run Mode screens. Note: all outputs are disabled while using the Setup Menus.

1. Use ⇦⇨ keys to move to the Display Menu.
2. Press ⇩ key until Mf Vf Pr Te De T appears.
3. Press ENTER to select. Press ⇨ key until the cursor is positioned below Te.
4. Press ⇩ key until N appears. Press ENTER to select.
5. Press EXIT and then ENTER to save changes and return to the Run Mode.

Alarms Menu

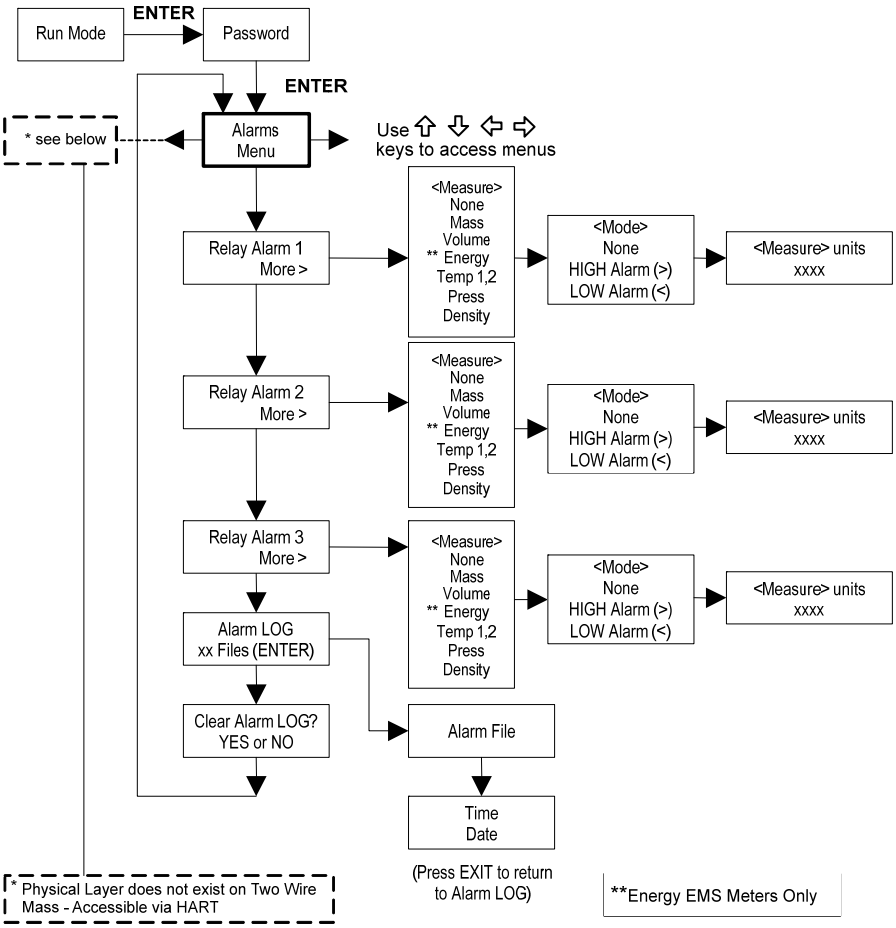

Example for Setting an Alarm

The following shows how to set Relay Alarm 1 to activate if the mass flow rate is greater than 100 lb/hr. You can check the alarm configuration in the Run Mode by pressing the ⇧⇩ keys until Alarm [1] appears. The lower line displays the mass flow rate at which the alarm activates. Note: all outputs are disabled while using the Setup Menus.

First, set the desired units of measurement:

1. Use ⇦⇨ keys to move to the Units Menu (see to page 3-12).
2. Press ⇩ key until Mass Flow Unit appears. Press ENTER.
3. Press ⇩ key until lb appears in the numerator. Press ⇨ key to move the underline cursor to the denominator. Press the ⇩ key until hr appears in the denominator. Press ENTER to select.
4. Press ⇧ key until Units Menu appears.

Second, set the alarm:

1. Use ⇦⇨ keys to move to the Alarms Menu.
2. Press the ⇩ key until Relay Alarm 1 appears.
3. Press ⇨ key to access Measure selections. Press ENTER and use the ⇩ key to select Mass. Press ENTER.
4. Press ⇨ key to select the alarm Mode. Press ENTER and use ⇩ key to select HIGH Alarm. Press ENTER.
5. Press ⇨ key to select the value that must be exceeded before the alarm activates. Press ENTER and use ⇧⇩⇦⇨ keys to set 100 or 100.0. Press ENTER.
6. Press the EXIT key to save your changes. (Alarm changes are always permanently saved.) (Up to three relay alarm outputs are available depending on meter configuration.)

Totalizer #1 Menu

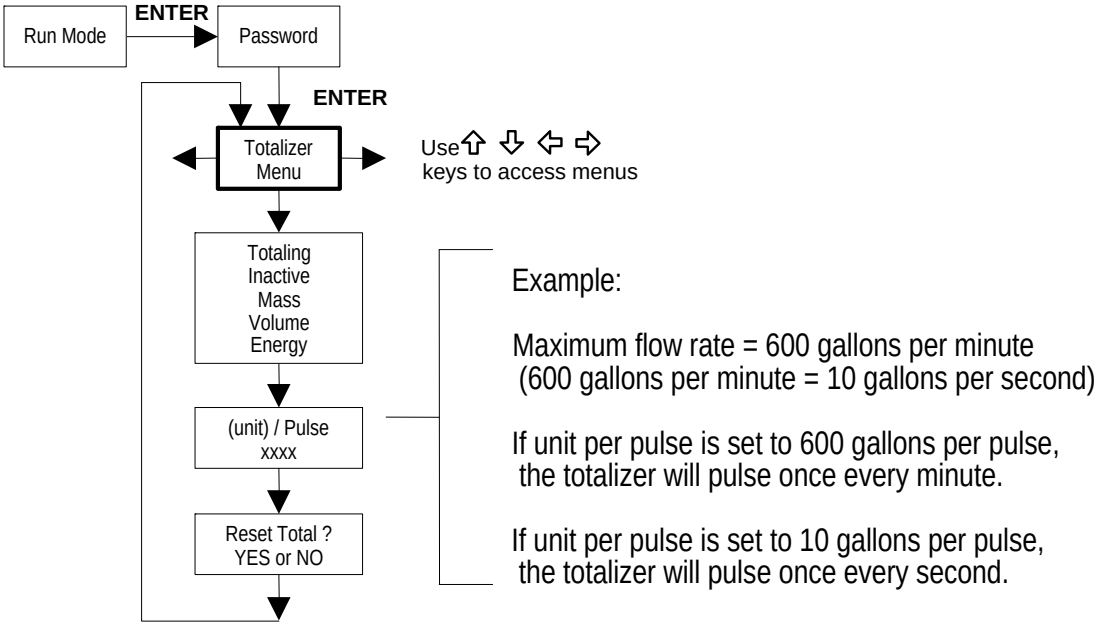

Use the Totalizer Menu to configure and monitor the totalizer. The totalizer output is a 50 millisecond (.05 second) positive pulse (relay closed for 50 milliseconds). The totalizer cannot operate faster than one pulse every 100 millisecond (.1 second). A good rule to follow is to set the unit per pulse value equal to the maximum flow in the same units per second. This will limit the pulse to no faster than one pulse every second.

Example for Setting the Totalizer

The following shows how to set the totalizer to track mass flow in kg/sec. (All outputs are disabled while using the Setup Menus.)

First, set the desired units of measurement:

1. Use ⇦⇨ keys to move to the Units Menu (see to page 3-12).
2. Press ⇩ key until Mass Flow Unit appears. Press ENTER.
3. Press ⇩ key until kg appears in the numerator. Press ⇨ key to move the underline cursor to the denominator. Press the ⇩ key until sec appears in the denominator. Press ENTER to select.
4. Press ⇧ key until Units Menu appears.

Second, set the pulse output:

1. Use ⇦⇨ keys to move to the Totalizer Menu.
2. Press the ⇩ key until Totaling appears.
3. Press ENTER and press the ⇩ key to select Mass. Press ENTER.
4. Press ⇩ key to set the pulse output in the units you have selected for mass flow of kg/sec. Press ENTER and use ⇧⇩⇦⇨ keys to set the pulse value equal to the maximum flow in the same units per second. Press ENTER.
5. To reset the totalizer, press ⇩ key until Reset Total? appears. Press ENTER and the ⇩ key to reset the totalizer if desired. Press ENTER.
6. Press the EXIT key and answer YES to permanently save your changes.

Totalizer #2 Menu

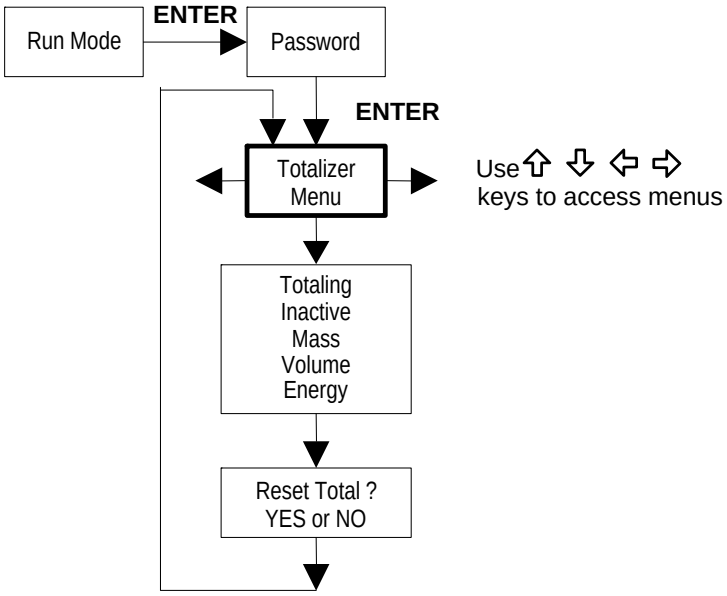

Use the Totalizer #2 to Monitor Flow or Energy. Note that Totalizer #2 does not operate a relay, it is for monitoring only.

Energy Menu – For EMS Energy Meters Only

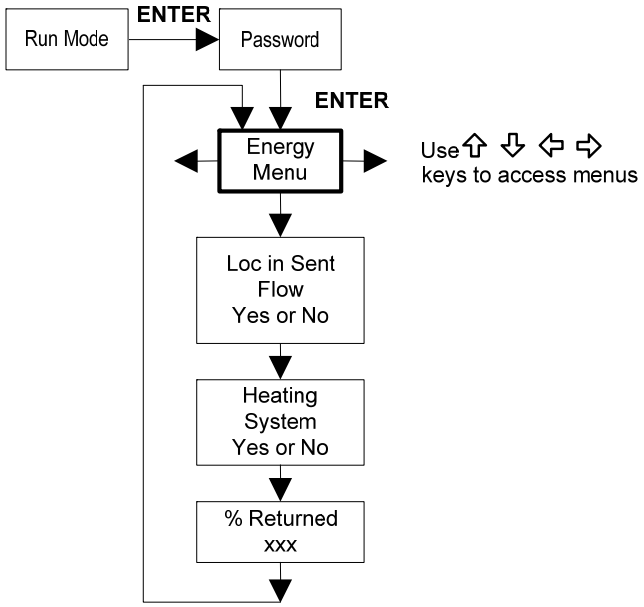

Configuration:

There are several possibilities regarding the measurement of water or steam energy given the location of the meter and the use of a second RTD. The table below summarizes the possibilities:

Fluid	Meter Location	Second RTD	Measurement
Water	"Sent" Flow Line	"Return Flow Line	Change in Energy
Water	"Return" Flow Line	"Sent" Flow Line	Change in Energy
Water	"Sent" Flow Line	None	Outgoing Energy
Steam	"Sent" Flow Line	"Return" Flow Line (condensate)	Change in Energy
Steam	"Sent" Flow Line	None	Outgoing Energy

As above, you must properly configure the meter in the Energy Menu.

1. Loc in Sent Flow? Select Yes or No based on where the meter is located. Refer to the above table
2. Heating System? Select Yes for a hot water system used for heating. Select No for a chilled water system used for cooling. Always select Yes for a steam system.
3. % Returned. Select a number between 0% and 100%. Estimate the amount of water that returns. It is usually 100%, or can be less than 100% if historical data shows the amount of makeup water used. If a second RTD is not used, set to 0%. When 0% is selected, the energy calculation represents the outgoing energy only (no return energy is subtracted). **NOTE: the meter ships from the factory assuming 0% return and has a 1000 ohm resistor installed in the RTD #2 wiring location. This needs to be removed if the meter is to be used in a manner other than with 0% return and with the customer supplied RTD in its place.**

Fluid Menu

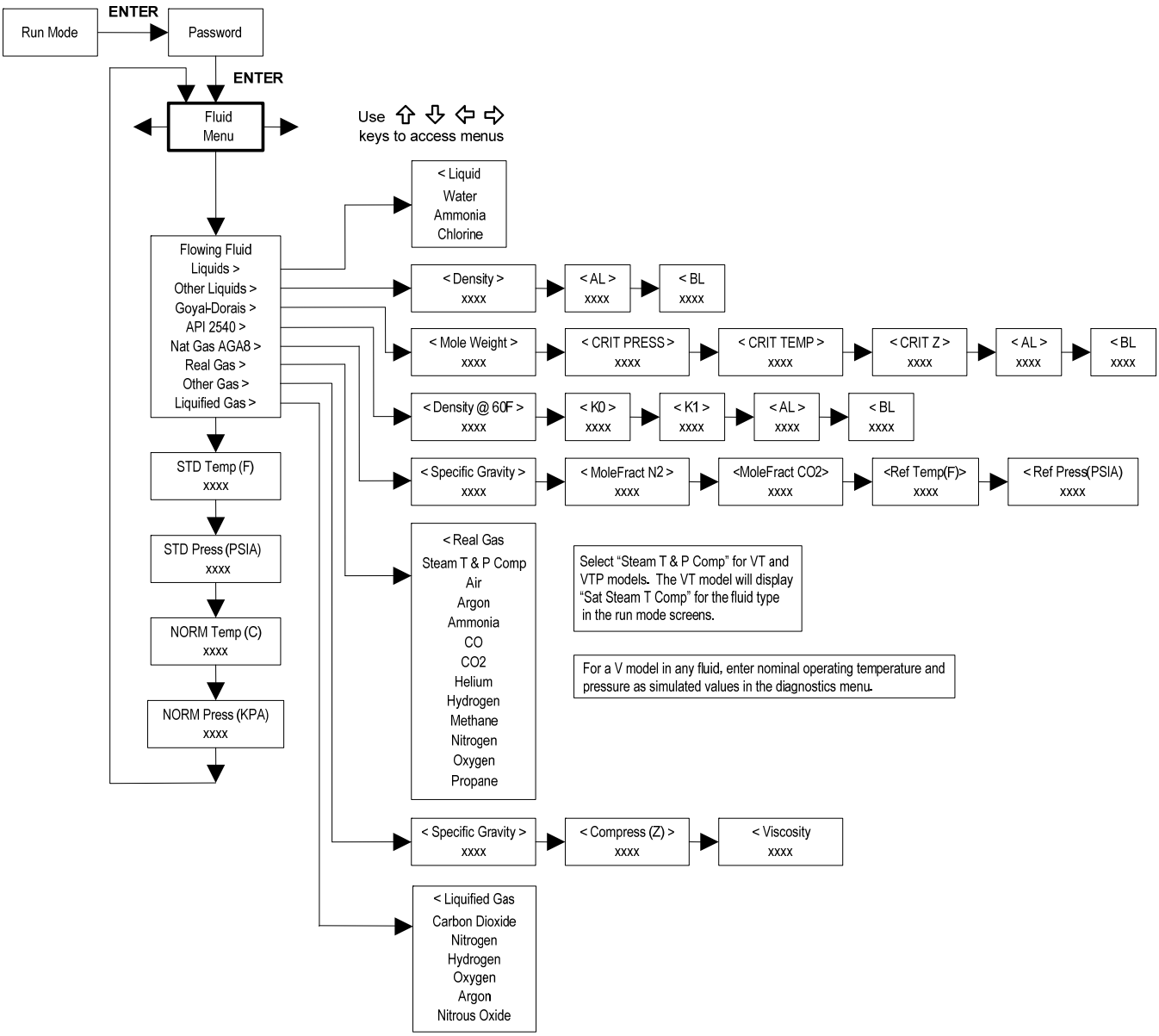

Use the Fluid Menu to configure the flow meter for use with common gases, liquids and steam. Your flow meter is pre-programmed at the factory for your application's process fluid.

Reference Richard W. Miller, *Flow Measurement Engineering Handbook (Third Edition, 1996)*, page 2-75 for definition and use of the Goyal-Doraiswamy equation and page 2-76 for the definition and use of the API 2540 equation. Also, see Appendix C for Fluid Calculation equations.

The units of measurement used in the Fluid Menu are preset and are as follows:

Mole Weight = $lb_m/(lb_m \cdot mol)$, CRIT PRESS = psia, CRIT TEMP = °R, Density = Kg/m^3 and Viscosity = cP (centipoise).

Units Menu

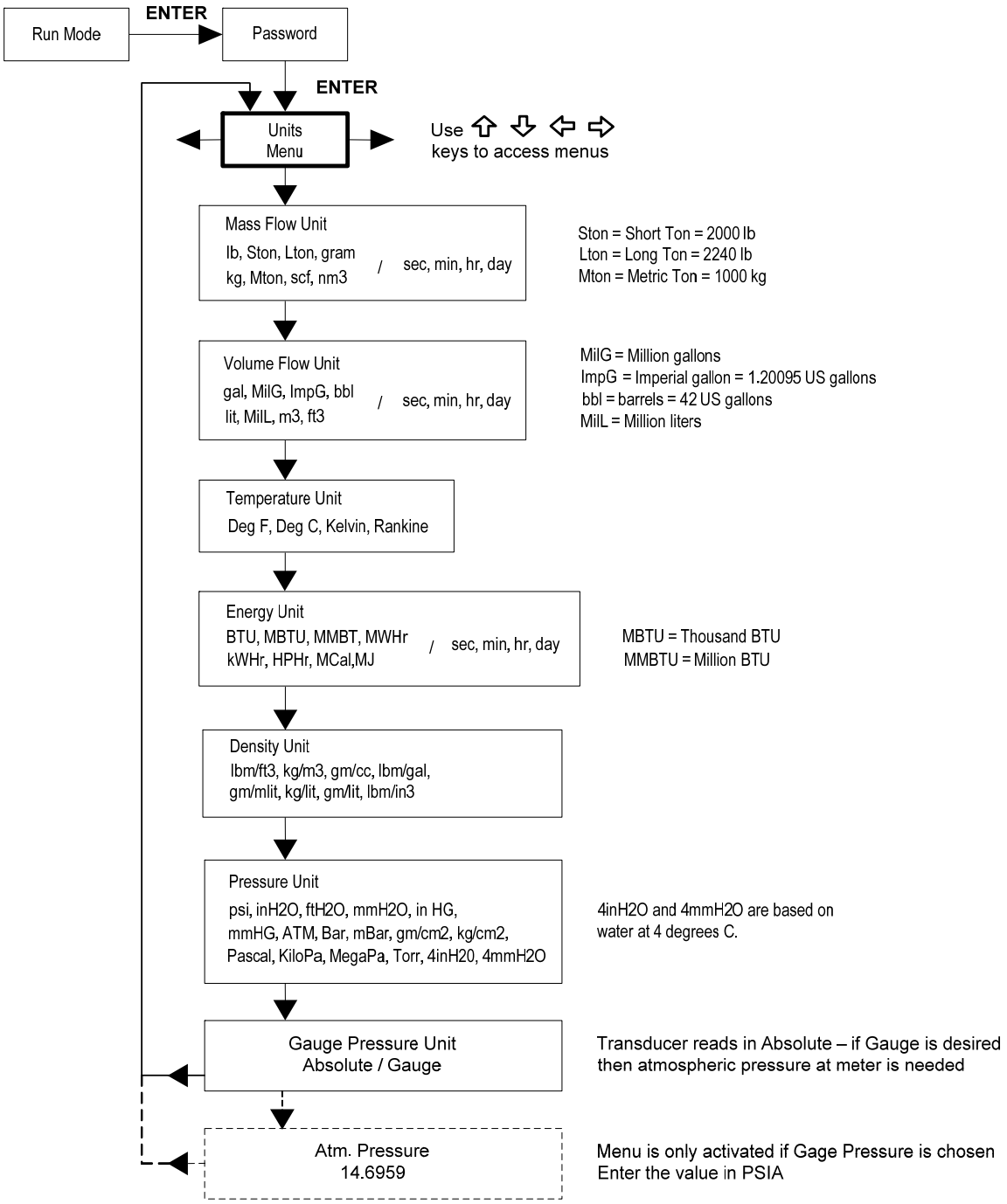

Use the Units Menu to configure the flow meter with the desired units of measurement. (These are global settings and determine what appears on all screens.

Time & Date Menu

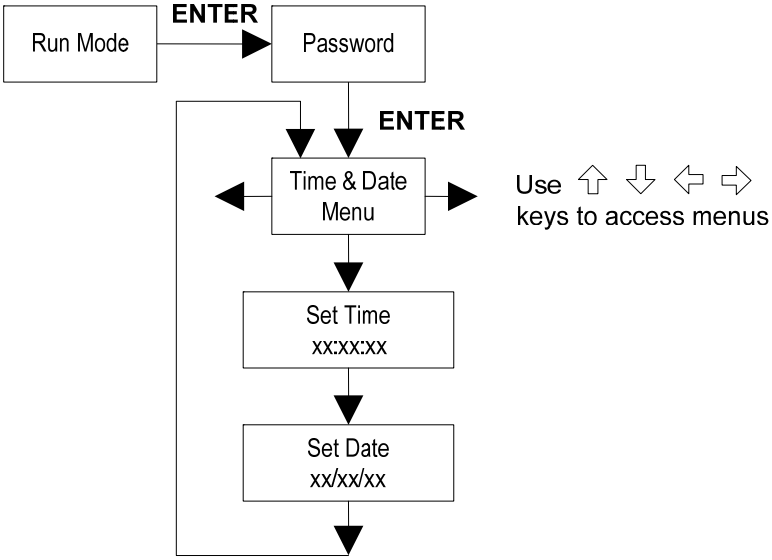

Use the Time and Date Menu to enter the correct time and date into the flow meter's memory. The parameters are used in the Run Mode and the alarm and system log files.

Note: Time is displayed in AM/PM format, but military format is used to set the time. For example, 1:00 PM is entered as 13:00:00 in the Set Time menu.

Example for Setting the Time

How to set the time to 12:00:00. You can check the time in the Run Mode by pressing the ⇧⇩ keys until the Time & Date screen appears. Note: all outputs are disabled while using the Setup Menus.

1. Use ⇦⇨ keys to move to the Time and Date Menu.
2. Press ⇩ key until Set Time appears. Press ENTER.
3. Press ⇩ key until 1 appears. Press ⇨ key to move the underline cursor to the next digit. Press the ⇩ key until 2 appears. Continue sequence until all desired parameters are entered. Press ENTER to return to the Time and Date Menu.
4. Press **EXIT** to return to the Run Mode.

Diagnostics Menu

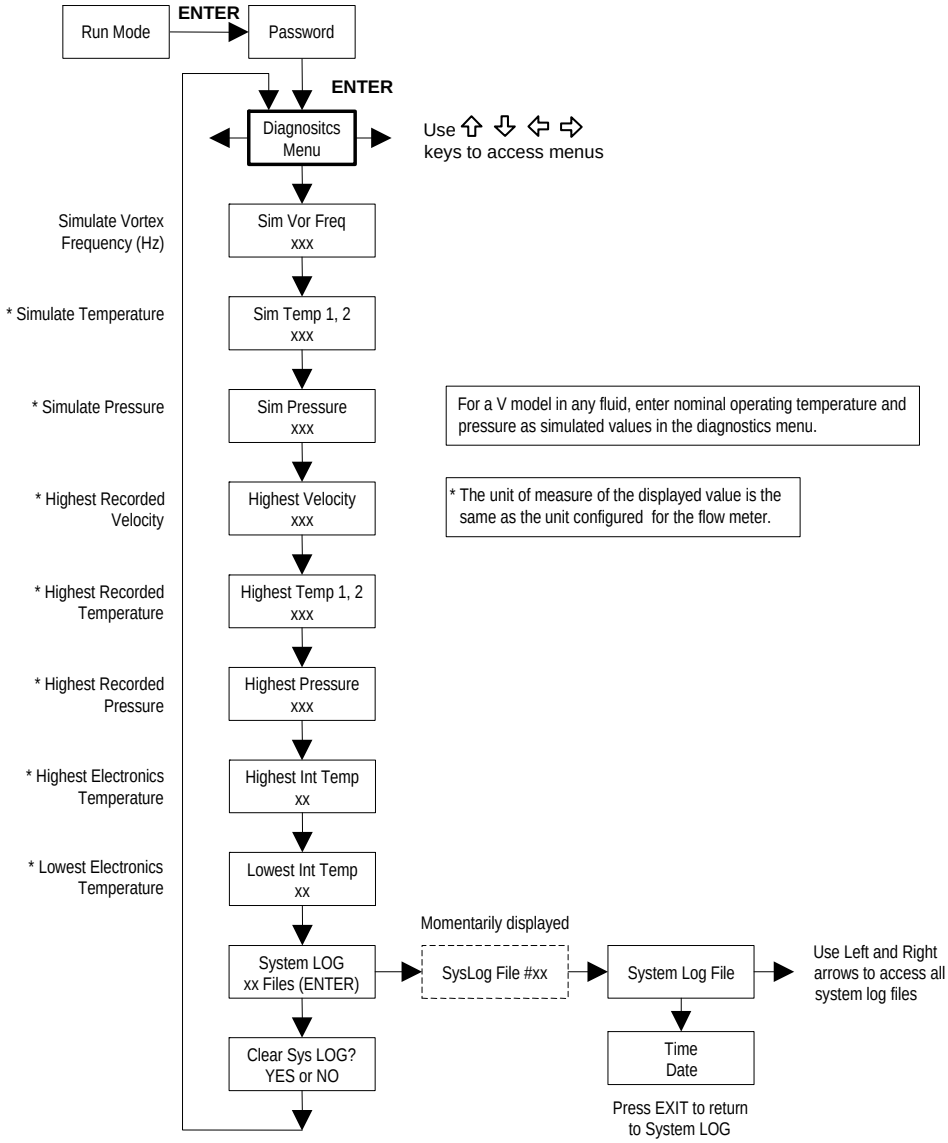

Use the Diagnostics Menu to simulate operation and review the system files. The system log files contain time/date stamped messages including: power on, power off, programming time outs, parameter faults, incorrect password entry and other various information relative to system operation and programming.

The simulated inputs are for testing the meter to verify that the programming is correct. They are also used to enter nominal operating temperature and pressure for the V only model. Simulated vortex frequency allows you to enter any value for the sensor input in Hz. The meter will calculate a flow rate based on the corresponding value and update all analog outputs **(the totalizer display and output is not affected by a simulated frequency)**. The simulated pressure and temperature settings work the same way. The meter will output these new values and will use them to calculate a new density for mass flow measurement. Note: when your diagnostic work is complete, make sure to return the values to zero to allow the electronics to use the actual transducer values. For the V only model keep the temperature and pressure at nominal operating conditions.

If the meter display indicates a temperature or pressure fault, a substitute value can be entered to allow flow calculations to continue at a fixed value until the source of the fault is identified and corrected. **The units of measure of the displayed values are the same as the units configured for the flow meter.**

Calibration Menu

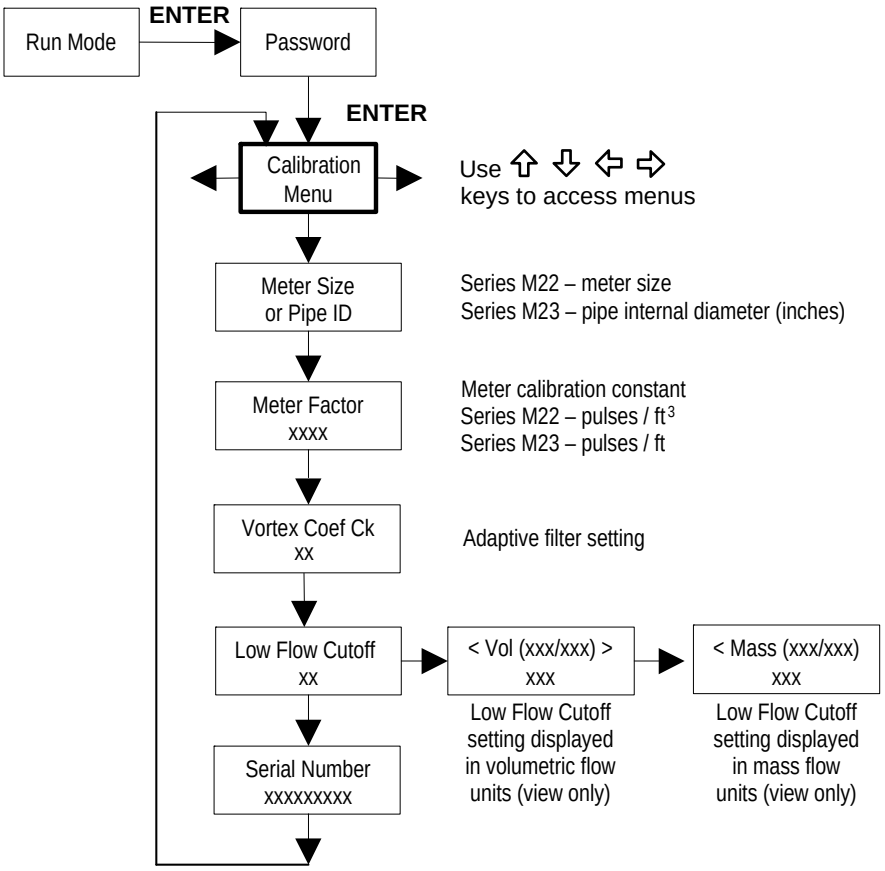

The Calibration Menu contains the calibration coefficients for the flow meter. These values should by changed only by properly trained personnel. The Vortex Coef Ck and Low Flow Cutoff are set at the factory. Consult the factory for help with these settings if the meter is showing erratic flow rate.

Password Menu

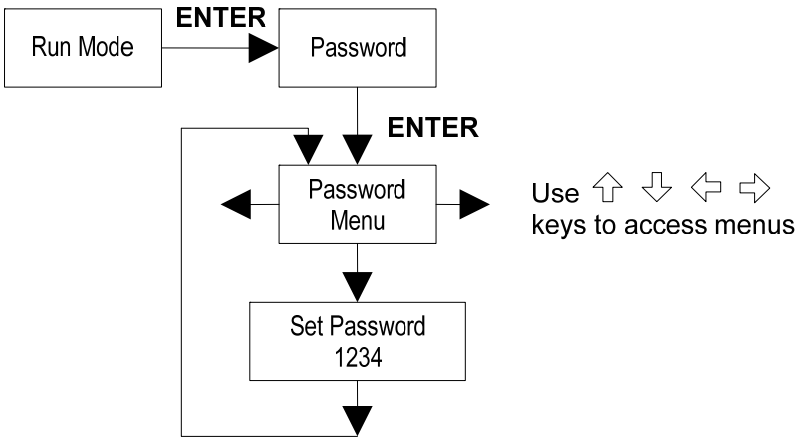

Use the Password Menu to set or change the system password. The factory-set password is 1234.

Chapter 4 Serial Communications

HART Communications

The HART Communications Protocol (Highway Addressable Remote Transducer Protocol) is a bidirectional digital serial communications protocol. The HART signal is based on the Bell 202 standard and is superimposed on 4-20 mA Output 1. Peer-to-peer (analog / digital) and multi-drop (digital only) modes are supported.

Wiring

The diagrams below detail the proper connections required for HART communications:

Warning!
Place controls in manual mode when making configuration changes to the vortex meter.

Loop Powered Meter Wiring

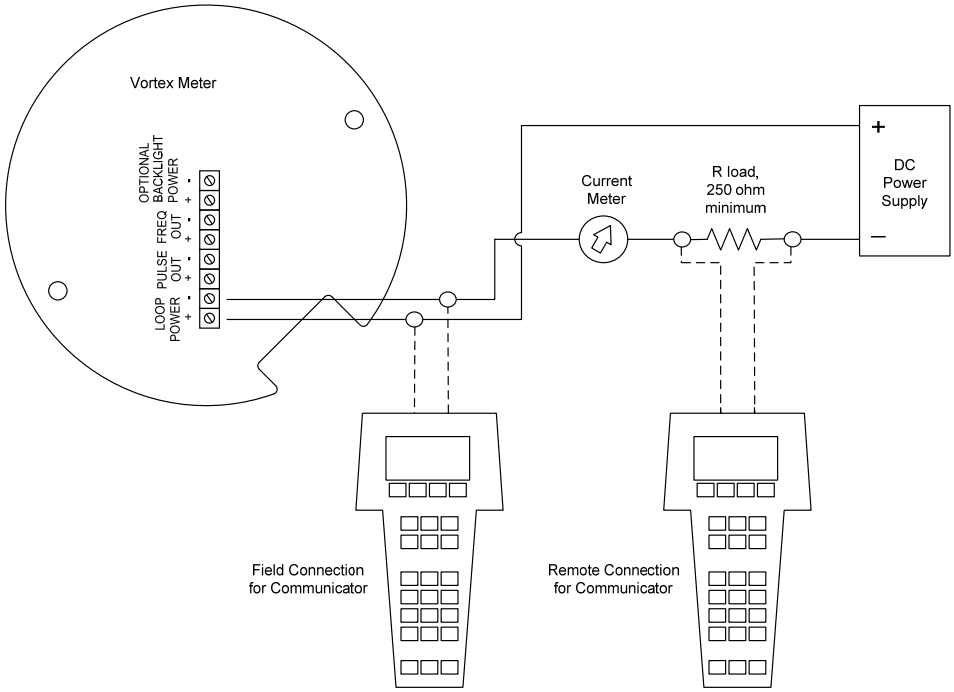

Figure 4-1.Loop Powered Meter Wiring (HART)

DC Powered Meter Wiring

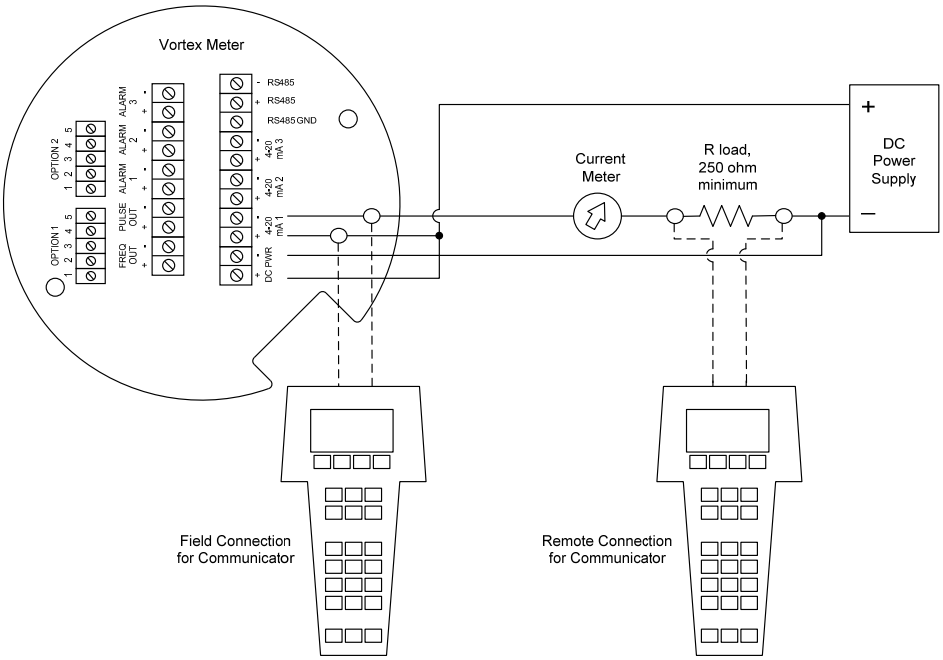

Figure 4-2.DC Powered Meter Wiring (HART)

AC Powered Meter Wiring

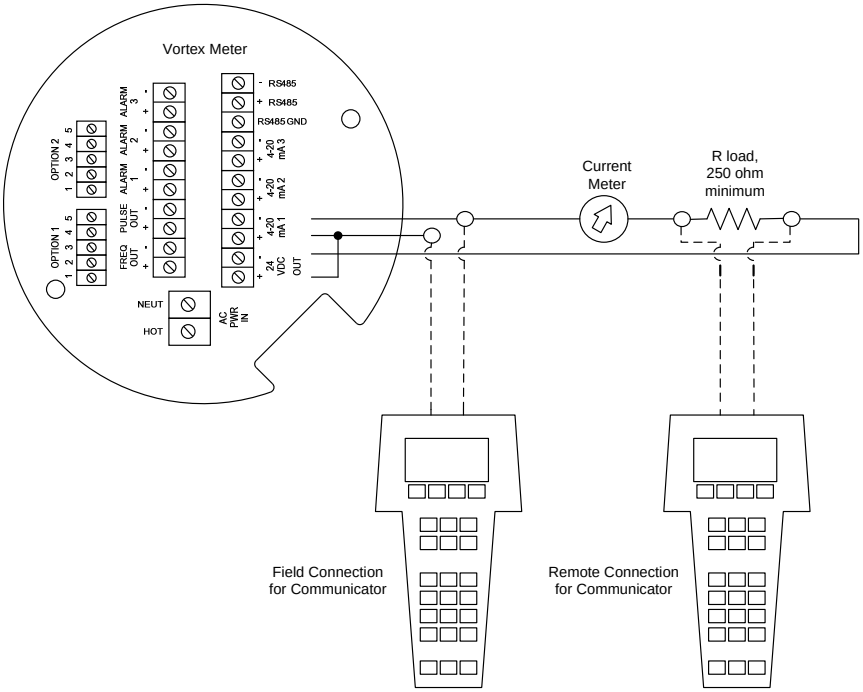

Figure 4-3.AC Powered Meter Wiring (HART)

HART Commands with the DD Menu

Online Menu

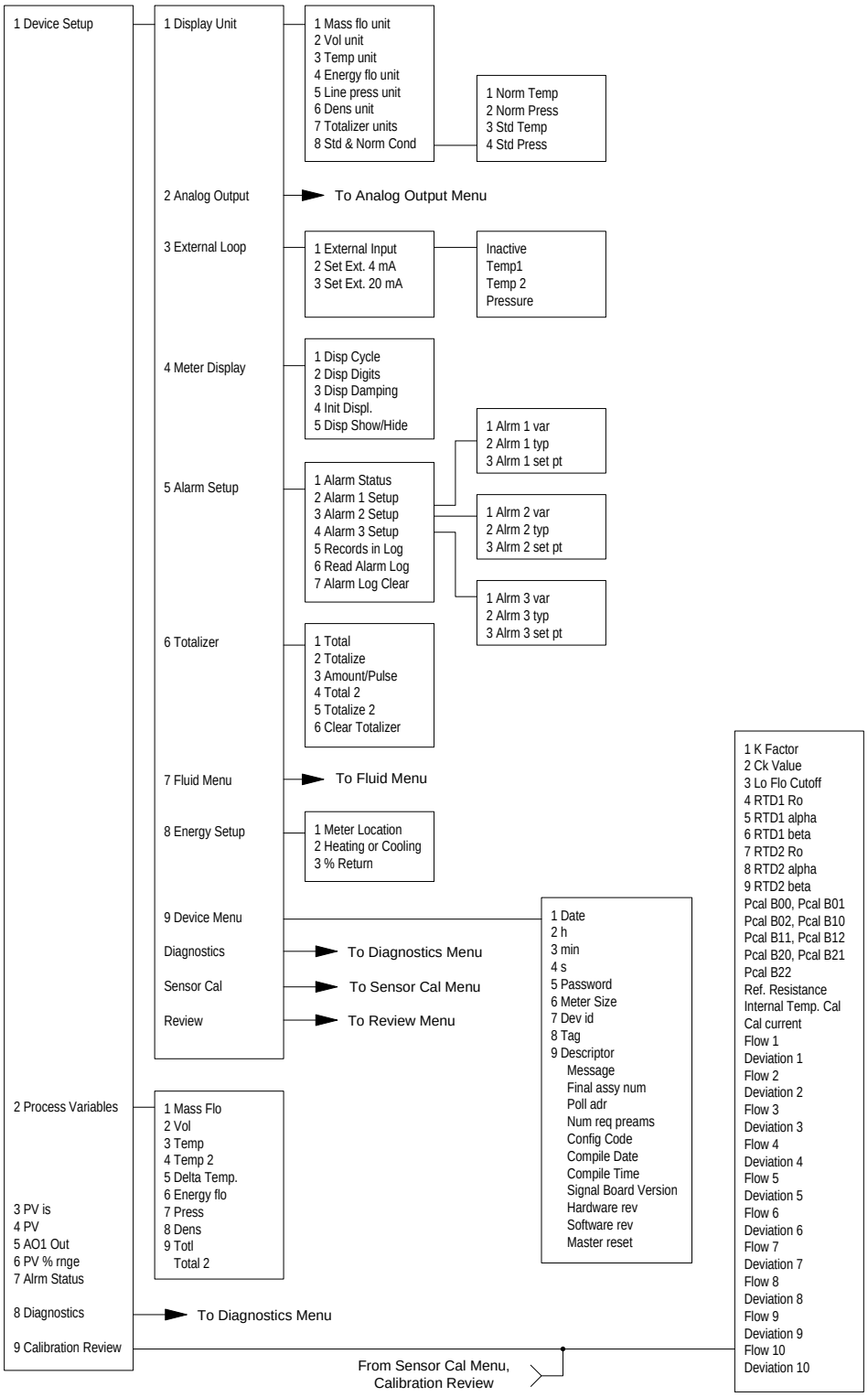

HART Commands with the DD Menu Continued

Analog Output Menu

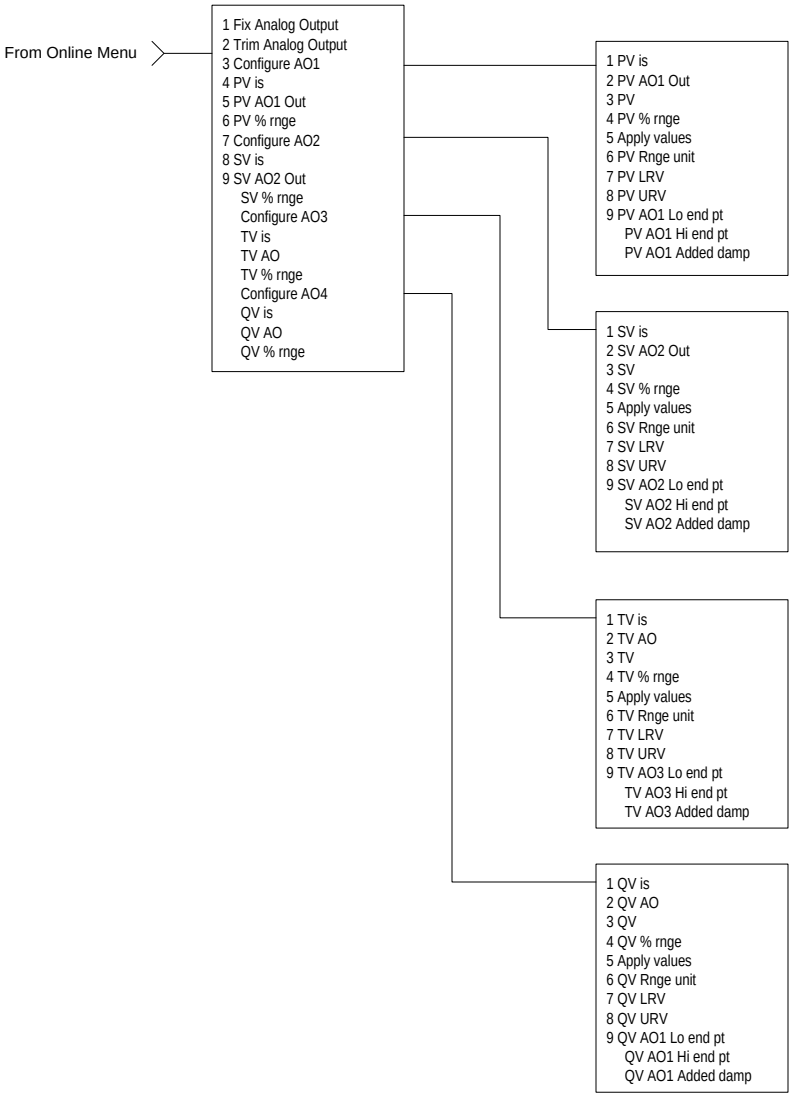

HART Commands with the DD Menu Continued

Fluid Menu

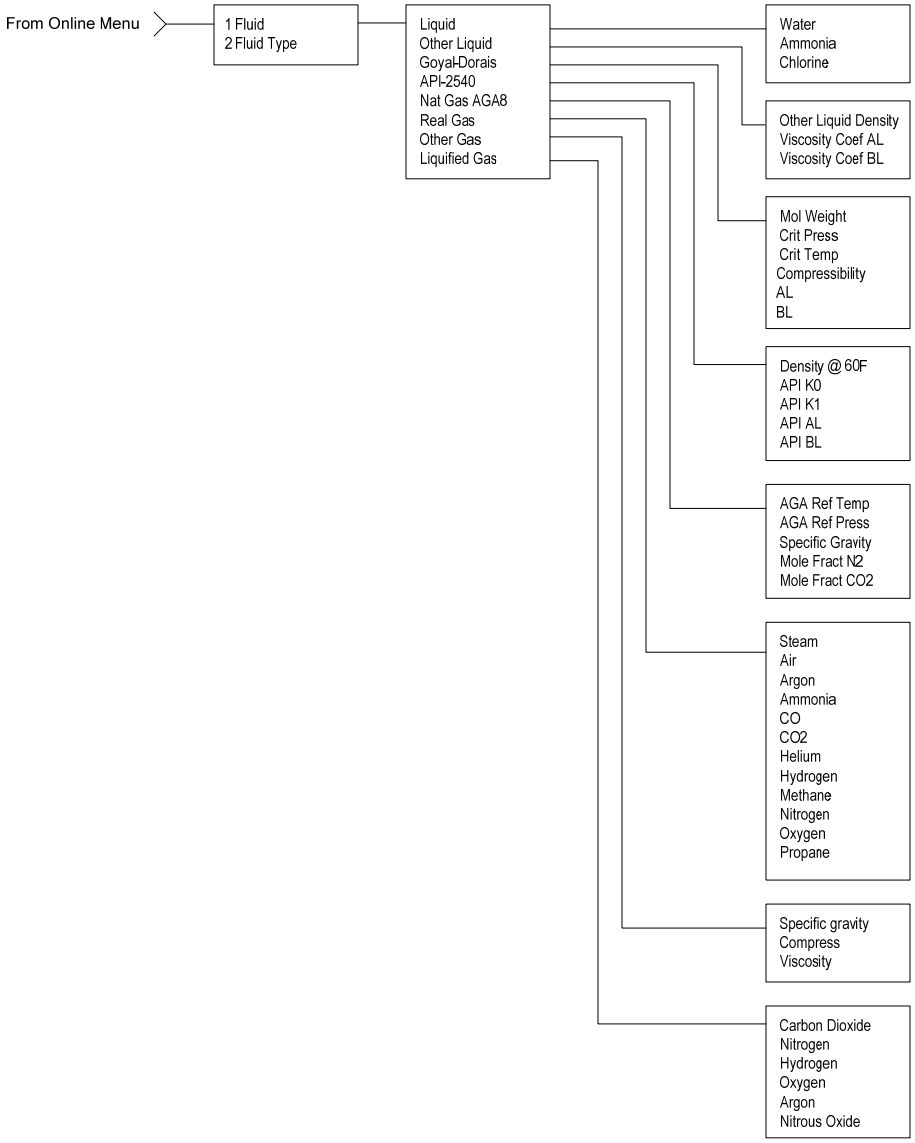

HART Commands with the DD Menu Continued

Diagnostics Menu

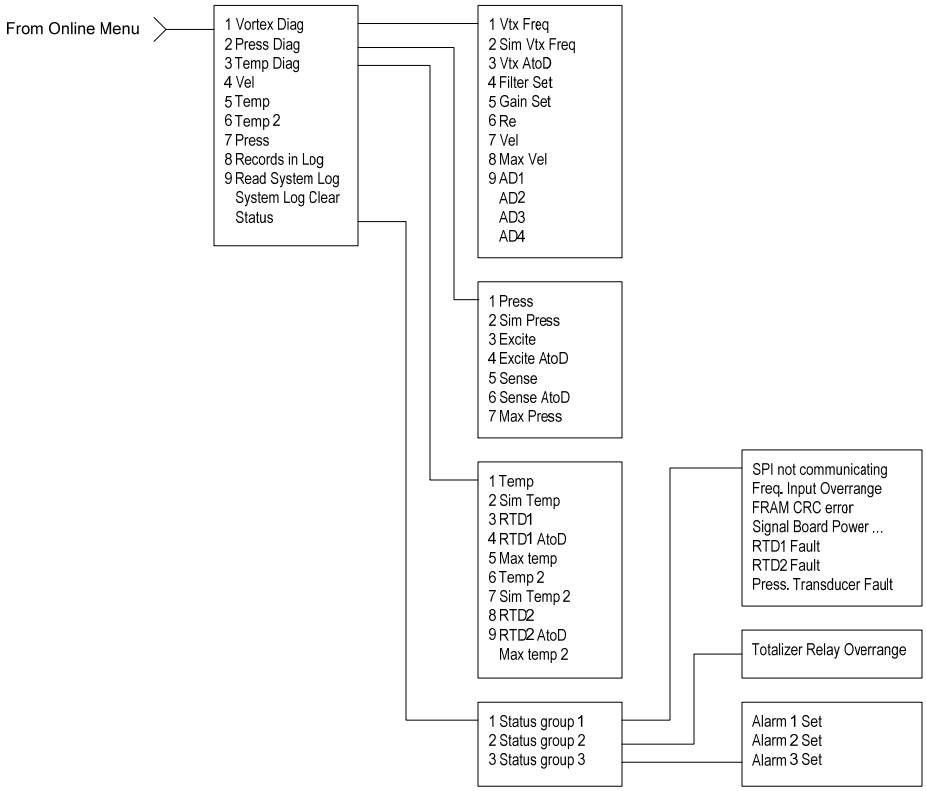

Review Menu

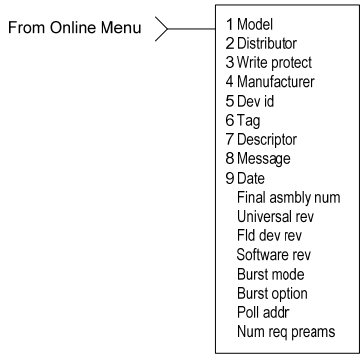

HART Commands with the DD Menu Continued

Sensor Cal Menu

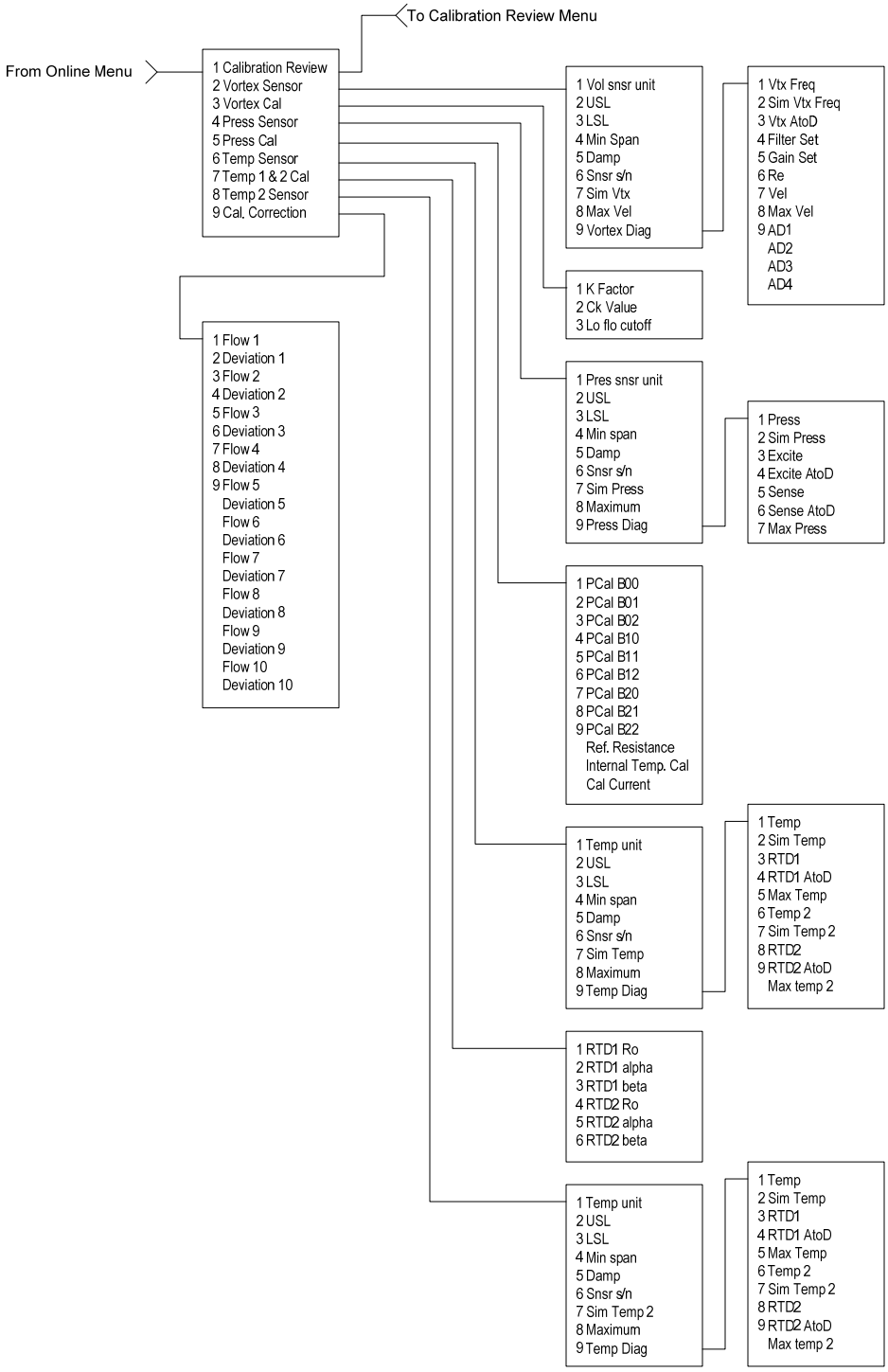

HART Commands with Generic DD Menu

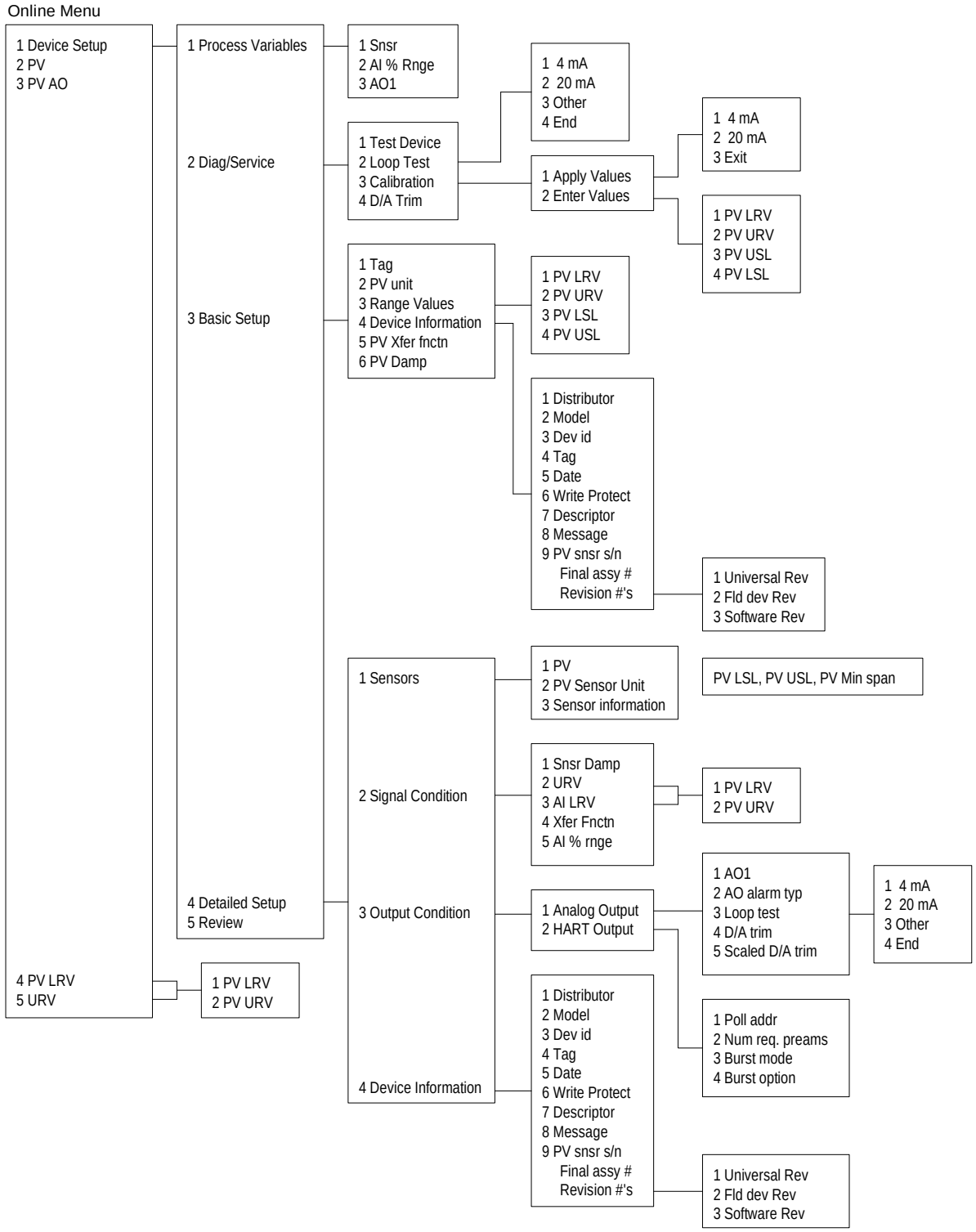

Use password 16363.

Fast Key Sequence

Use password 16363.

Sequence	Description	Access	Notes
1,1,1	Snsr	View	Primary variable value
1,1,2	AI % Rnge	View	Analog output % range
1,1,3	AO1	View	Analog output, mA
1,2,1	Test Device	N/A	Not used
1,2,2,1	4 mA	View	Loop test, fix analog output at 4 mA
1,2,2,2	20 mA	View	Loop test, fix analog output at 20 mA
1,2,2,3	Other	Edit	Loop test, fix analog output at mA value entered
1,2,2,4	End		Exit loop test
1,2,3,1,1	4 mA	N/A	Not used, apply values
1,2,3,1,2	20 mA	N/A	Not used, apply values
1,2,3,1,3	Exit		Exit apply values
1,2,3,2,1	PV LRV	Edit	Primary variable lower range value
1,2,3,2,2	PV URV	Edit	Primary variable upper range value
1,2,3,2,3	PV USL	View	Primary variable upper sensor limit
1,2,3,2,4	PV LSL	View	Primary variable lower sensor limit
1,2,4	D/A Trim	Edit	Calibrate electronics 4mA and 20mAvalues
1,3,1	Tag	Edit	Tag
1,3,2	PV unit	Edit	Primary variable units
1,3,3,1	PV LRV	Edit	Primary variable lower range value
1,3,3,2	PV URV	Edit	Primary variable upper range value
1,3,3,3	PV LSL	View	Primary variable upper sensor limit
1,3,3,4	PV USL	View	Primary variable lower sensor limit
1,3,4,1	Distributor	N/A	Not used
1,3,4,2	Model	N/A	Not used
1,3,4,3	Dev id	View	Device identification
1,3,4,4	Tag	Edit	Tag
1,3,4,5	Date	Edit	Date
1,3,4,6	Write Protect	View	Write protect
1,3,4,7	Descriptor	Edit	Vortex flowmeter
1,3,4,8	Message	Edit	32 character alphanumeric message
1,3,4,9	PV snsr s/n	View	Primary variable sensor serial number
1,3,4,menu	Final assy #	Edit	Final assembly number
1,3,4,menu,1	Universal Rev	View	Universal revision
1,3,4,menu,2	Fld dev Rev	View	Field device revision
1,3,4,menu,3	Software Rev	View	Software revision
1,3,5	PV Xfer fnctn	View	Linear
1,3,6	PV Damp	Edit	Primary variable damping (time constant) in seconds
1,4,1,1	PV	View	Primary variable value
1,4,1,2	PV Sensor Unit	Edit	Primary variable units
1,4,1,3	Sensor Information	View	PV LSL, PV USL, PV Min span
1,4,2,1	Snsr Damp	Edit	Primary variable damping (time constant) in seconds
1,4,2,2,1	PV LRV	Edit	Primary variable low range value
1,4,2,2,2	PV URV	Edit	Primary variable upper range value
1,4,2,3,1	PV LRV	Edit	Primary variable low range value
1,4,2,3,2	PV URV	Edit	Primary variable upper range value
1,4,2,4	Xfer Fnctn	View	Linear
1,4,2,5	AI % rnge	View	Analog output % range
1,4,3,1,1	AO1	View	Analog output, mA
1,4,3,1,2	AO alarm typ	N/A	Not used

Continued on next page

Sequence	Description	Access	Notes
1,4,3,1,3,1	4 mA	View	Loop test, fix analog output at 4 mA
1,4,3,1,3,2	20 mA	View	Loop test, fix analog output at 20 mA
1,4,3,1,3,3	Other	Edit	Loop test, fix analog output at mA value entered
1,4,3,1,3,4	End		Exit loop test
1,4,3,1,4	D/A trim	Edit	Calibrate electronics 4mA and 20mAvalues
1,4,3,1,5	Scaled D/A trim	N/A	Not used
1,4,3,2,1	Poll addr	Edit	Poll address
1,4,3,2,2	Num req. preams	View	Number of required preambles
1,4,3,2,3	Burst mode	N/A	Not used
1,4,3,2,4	Burst option	N/A	Not used
1,4,4,1	Distributor	N/A	Not used
1,4,4,2	Model	N/A	Not used
1,4,4,3	Dev id	View	Device identification
1,4,4,4	Tag	Edit	Tag
1,4,4,5	Date	Edit	Date
1,4,4,6	Write Protect	View	Write protect
1,4,4,7	Descriptor	Edit	Vortex flowmeter
1,4,4,8	Message	Edit	32 character alphanumeric message
1,4,4,9	PV snsr s/n	View	Primary variable sensor serial number
1,4,4,menu	Final assy #	Edit	Final assembly number
1,4,4,menu,1	Universal Rev	View	Universal revision
1,4,4,menu,2	Fld dev Rev	View	Field device revision
1,4,4,menu,3	Software Rev	View	Software revision
1,5	Review	N/A	Not used
2	PV	View	Primary variable value
3	PV AO	View	Analog output, mA
4,1	PV LRV	Edit	Primary variable lower range value
4,2	PV URV	Edit	Primary variable upper range value
5,1	PV LRV	Edit	Primary variable lower range value
5,2	PV URV	Edit	Primary variable upper range value

Modbus Communications

Warning!
Place controls in manual mode when making configuration changes to the vortex meter.

Applicable Flow Meter Models

Sierra's Innova-Mass Mass Vortex Flow Meters, Models 240 and 241 with Modbus communication protocol and firmware version 4.00.58 and above.

Overview

This document describes the preliminary implementation of the Modbus communication protocol for use in monitoring common process variables in the Sierra Innova-Mass Vortex flow meter. The physical layer utilizes the half-duplex RS-485 port, and the Modbus protocol.

Reference Documents

The following documents are available online from www.modbus.org.

Modbus Application Protocol Specification V1.1
Modbus Over Serial Line Specification & Implementation Guide V1.0
Modicon Modbus Protocol Reference Guide PI–MBUS–300 Rev. J

Wiring

An RS485 daisy chained network configuration as depicted below is recommended. Do not use a star, ring, or cluster arrangement.

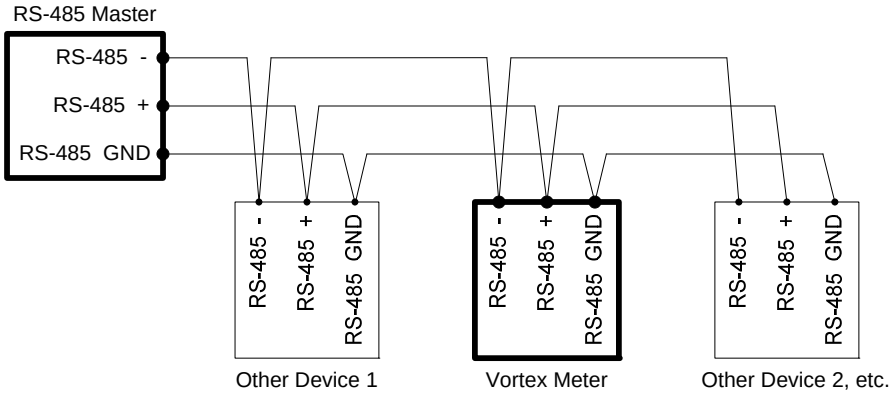

Figure 4-4.RS-485 Wiring (MODBUS)

Pin Labeling (among devices)

"RS-485 –" = "A" = "TxD-/RxD-" = "Inverting pin"

“RS-485 +” = “B” = “TxD+/RxD+” = “Non-Inverting pin”
“RS-485 GND” = “GND” = “G” = “SC” = “Reference”

Menu Items

The following menu items are in the Output Menu and allow selection and control of the Modbus communication protocol.

Address

When the Modbus protocol is selected, the Modbus address is equal to the user programmable device address if it is in the range 1…247, in accordance with the Modbus specification. If the device address is zero or is greater than 247, then the Modbus address is internally set to 1.

Comm Protocol

The Comm Protocol menu allows selection of “Modbus RTU Even,” “Modbus RTU Odd,” or “Modbus RTU None2,” or “Modbus RTU None1,” (non-standard Modbus) with Even, Odd and None referring to the parity selection. When even or odd parity is selected, the unit is configured for 8 data bits, 1 parity bit and 1 stop bit; with no parity, the number of stop bits is 1 (non-standard) or 2. When changing the protocol, the change is made as soon as the Enter key is pressed.

Modbus Units

The Modbus Units menu is to control what units, where applicable, the meter’s variables will be displayed in. Internal – these are the base units of the meter, °F, psia, lbm/sec , ft^3/sec, Btu/sec , lbm/ft^3 Display – variables are displayed in user selected display unit.

Modbus Order

The byte order within registers and the order in which multiple registers containing floating point or long integer data are transmitted may be changed with this menu item. According to the Modbus specification, the most significant byte of a register is transmitted first, followed by the least significant byte. The Modbus specification does not prescribe the order in which registers are transmitted when multiple registers represent values longer than 16 bits. Using this menu item, the order in which registers representing floating point or long integer data and/or the byte order within the registers may be reversed for compatibility with some PLCs and PC software.

The following four selections are available in this menu; when selecting an item, the protocol is changed immediately without having to press the Enter key.

0-1:2-3	Most significant register first, most significant byte first (default)
2-3:0-1	Least significant register first, most significant byte first
1-0:3-2	Most significant register first, least significant byte first
3-2:1-0	Least significant register first, least significant byte first

Table 4-1.Byte Order

Note that all of the registers are affected by the byte order, including strings and registers representing 16-bit integers; the register order only affects the order of those registers representing 32-bit floating point and long integer data, but does not affect single 16-bit integers or strings.

Modbus Protocol

The Modbus RTU protocol is supported in this implementation. Supported baud rates are 1200, 2400, 4800, 9600, 19200, 38400, 57600, and 115200. The default baud rate is 19200 baud. Depending upon the Modbus protocol selected, data are transmitted in 8-bit data frames with even or odd parity and 1 stop bit, or no parity and 2 or 1 (non-standard) stop bits.

The current Modbus protocol specification does not define register usage, but there is an informal register numbering convention derived from the original (now obsolete) Modicon Modbus protocol specification, and used by many vendors of Modbus capable products.

Registers	Usage	Valid Function Codes
00001–09999	Read/write bits ("coils")	01 (read coils) 05 (write single coil) 15 (write multiple coils)
10001–19999	Read-only bits ("discrete inputs")	02 (read discrete inputs)
30001–39999	Read-only 16 bit registers ("input registers"), IEEE 754 floating point register pairs, arbitrary length strings encoded as two ASCII characters per 16-bit register	03 (read holding registers) 04 (read input registers)
40001–49999	Read/write 16-bit registers ("holding registers"), IEEE 754 floating point register pairs, arbitrary length strings encoded as two ASCII characters per 16-bit register	03 (read holding registers) 06 (write single register) 16 (write multiple registers)

Each range of register numbers maps to a unique range of addresses that are determined by the function code and the register number. The address is equal to the least significant four digits of the register number minus one, as shown in the following table.

Registers	Function Codes	Data Type and Address Range
00001-09999	01, 05, 15	Read/write bits 0000-9998
10001-19999	02	Read-only bits 0000-9999
30001-39999	03, 04	Read-only 16-bit registers 0000-9998
40001-49999	03, 06, 16	Read/write 16-bit registers 0000-9998

Register Definitions

The meter serial number and those variables that are commonly monitored (mass, volume and energy flow rates, total, pressure, temperature, density, viscosity, Reynolds number, and diagnostic variables such as frequency, velocity, gain, amplitude and filter setting) are accessible via the Modbus protocol. Long integer and floating point numbers are accessed as pairs of 16-bit registers in the register order selected in the Modbus Order menu. Floating point numbers are formatted as single precision IEEE 754 floating point values.

The flow rate, temperature, pressure, and density variables may be accessed as either the flow meter internal base units or in the user-programmed display units, which is determined by the programming Output Menu's "Modbus Units" item. The display units strings may be examined by accessing their associated registers. Each of these units string registers contain 2 characters of the string, and the strings may be 2 to 12 characters in length with unused characters set to zero. Note that the byte order affects the order in which the strings are transmitted. If the Modbus Order menu (see page 2) is set to 0-1:2-3 or 2-3:0-1, then the characters are transmitted in the correct order; if set to 1-0:3-2 or 3-2:1-0, then each pair of characters will be transmitted in reverse order.

Registers	Variable	Data type	Units	Function code	Addresses
65100-65101	Serial number	unsigned long	—	03, 04	
30525-30526	Totalizer	unsigned long	display units*	03, 04	524-525
32037-32042	Totalizer units	string	—	03, 04	2036-2041
30009-30010	Mass flow	float	display units*	03, 04	8-9
30007-30008	Volume flow	float	display units*	03, 04	6-7
30005-30006	Pressure	float	display units*	03, 04	4-5
30001-30002	Temperature	float	display units*	03, 04	0-1
30029-30030	Velocity	float	ft/sec	03, 04	28-29
30015-30016	Density	float	display units*	03, 04	14-15
30013-30014	Viscosity	float	cP	03, 04	12-13
30031-30032	Reynolds number	float	—	03, 04	30-31
30025-30026	Vortex frequency	float	Hz	03, 04	24-25
34532	Gain	char	—	03, 04	4531
30085-30086	Vortex amplitude	float	Vrms	03, 04	84-85
30027-30028	Filter setting	float	Hz	03, 04	26-27

Table 4-2.Register Definitions

The following registers are available with the energy meter firmware:

Registers	Variable	Data type	Units	Function code	Addresses
30527-30528	Totalizer #2	unsigned long	display units*	03, 04	526-527
32043-32048	Totalizer #2 units	string	—	03, 04	2042-2047
30003-30004	Temperature #2	float	display units*	03, 04	2-3
30011-30012	Energy flow	float	display units*	03, 04	10-11

The following registers contain the display units strings:

Registers	Variable	Data type	Units	Function code	Addresses
32007-32012	Volume flow units	string	—	03, 04	2006-2011
32001-32006	Mass flow units	string	—	03, 04	2000-2005
32025-32030	Temperature units	string	—	03, 04	2024-2029
32019-32024	Pressure units	string	—	03, 04	2018-2023
32031-32036	Density units	string	—	03, 04	2030-2035
32013-32017	Energy flow units	string	—	03, 04	2012-2017

Function codes 03 (read holding registers) and 04 (read input registers) are the only codes supported for reading these registers, and function codes for writing holding registers are not implemented. We recommend that the floating point and long integer registers be read in a single operation with the number of registers being a multiple of two. If these data are read in two separate operations, each

reading a single 16-bit register, then the value will likely be invalid.

The floating point registers with values in display units are scaled to the same units as are displayed, but are instantaneous values that are not smoothed. If display smoothing is enabled (non-zero value entered in the Display TC item in the Display Menu), then the register values will not agree exactly with the displayed values.

Exception Status Definitions

The Read Exception Status command (function code 07) returns the exception status byte, which is defined as follows. This byte may be cleared by setting "coil" register #00003 (function code 5, address 2, data = 0xff00).

Bit(s)	Definition
0-1	Byte order (see Modbus Order on page 2) 0 = 3-2:1-0 1 = 2-3:0-1 2 = 1-0:3-2 3 = 0-1:2-3
2	Temperature sensor fault
3	Pressure sensor fault
4	A/D converter fault
5	Period overflow
6	Pulse overflow
7	Configuration changed

Discrete Input Definitions

The status of the three alarms may be monitored via the Modbus Read Discrete Input command (function code 02). The value returned indicates the state of the alarm, and will be 1 only if the alarm is enabled and active. A zero value is transmitted for alarms that are either disabled or inactive,

Registers	Variable	Function Code	Address
10001	Alarm #1 state	02	0
10002	Alarm #2 state	02	1
10003	Alarm #3 state	02	2

Control Register Definitions

The only writeable registers in this implementation are the Reset Exception Status, Reset Meter and Reset Totalizer functions, which are implemented as ”coils” which may be written with the Write Single Coil command (function code 05) to address 8 through 10, respectively, (register #00009 through #00011). The value sent with this command must be either 0x0000 or 0xff00, or the meter will respond with an error message; the totalizer will be reset or exception status cleared only with a value of 0xff00.

Error Responses

If an error is detected in the message received by the unit, the function code in the response is the received function code with the most significant bit set, and the data field will contain the exception code byte, as follows:

Exception Code	Description
01	Invalid function code — function code not supported by device
02	Invalid data address — address defined by the start address and number of registers is out of range
03	Invalid data value — number of registers = 0 or >125 or incorrect data with the Write Single Coil command

If the first byte of a message is not equal to the unit’s Modbus address, if the unit detects a parity error in any character in the received message (with even or odd parity enabled), or if the message CRC is incorrect, the unit will not respond.

Command Message Format

The start address is equal to the desired first register number minus one. The addresses derived from the start address and the number of registers must all be mapped to valid defined registers, or an invalid data address exception will occur.

Device Address	Function Code	Start Address	N = Number of Registers	CRC
8 bits, 1…247	8 bits	16 bits, 0…9998	16 bits, 1…125	16 bits

Normal Response Message Format

Device Address	Function Code	Byte Count = 2 x N	Data	CRC
8 bits, 1…247	8 bits	8 bits	(N) 16-bit registers	16 bits

Exception Response Message Format

Device Address	Function Code + 0x80	Exception Code	CRC
8 bits, 1…247	8 bits	8 bits	16 bits

Examples

Read the exception status byte from the device with address 1:

```
01 07 41 E2


01 Device address
07 Function code, 04 = read exception status
```

A typical response from the device is as follows:

```
01 07 03 62 31


01 Device address
07 Function code
03 Exception status byte
62 31 CRC
```

Request the first 12 registers from device with address 1:

```
01 04 00 00 00 0C F0 0F


01 Device address
04 Function code, 04 = read input register
00 00 Starting address
00 0C Number of registers = 12
F0 0F CRC
```

A typical response from the device is as follows: *note these are the older register definitions

```
01 04 18 00 00 03 E8 00 00 7A 02 6C 62 00 00 41 BA 87 F2 3E BF
FC 6F 42 12 EC 8B 4D D1


01 Device address
04 Function code
18 Number of data bytes = 24
00 00 03 E8 Serial number = 1000 (unsigned long)
00 00 7A 02 Totalizer = 31234 lbm (unsigned long)
6C 62 00 00 Totalizer units = "lb" (string, unused characters
are 0)
41 BA 87 F2 Mass flow rate = 23.3164 lbm/sec (float)
3E BF FC 6F Volume flow rate = 0.3750 ft3/sec (float)
42 12 EC 8B Pressure = 36.731 psia (float)
4D D1 CRC
```

An attempt to read register(s) that don't exist

```
01 04 00 00 00 50 F1 D2
```

```
01 Device address
04 Function code 4 = read input register
00 00 Starting address
00 50 Number of registers = 80
F0 36 CRC
```

results in an error response as follows:

```
01 84 02 C2 C1
```

```
01 Device address
84 Function code with most significant bit set indicates
error response
02 Exception code 2 = invalid data address
C2 C1 CRC
```

Request the state all three alarms:

```
01 02 00 00 00 03 38 0B
```

```
01 Device address
02 Function code 2 = read discrete inputs
00 00 Starting address
00 03 Number of inputs = 3
38 0B CRC
```

and the unit responds with:

```
01 02 01 02 20 49
```

```
01 Device address
02 Function code
01 Number of data bytes = 1
02 Alarm #2 on, alarms #1 and #3 off
20 49 CRC
```

To reset the totalizer:

```
01 05 00 00 FF 00 8C 3A
```

```
01 Device address
05 Function code 5 = write single coil
00 09 Coil address = 9
FF 00 Data to reset totalizer
8C 3A CRC (not the correct CRC EJS-02-06-07)
```

The unit responds with an identical message to that transmitted, and the totalizer is reset. If the “coil” is turned off as in the following message, the response is also identical to the transmitted message, but the totalizer is not affected.

```
01 05 00 00 00 00 CD CA


01 Device address
05 Function code 5 = write single coil
00 00 Coil address = 0
00 00 Data to “turn off coil” does not reset totalizer
CD CA CRC
```

Chapter 5 Troubleshooting and Repair

Before attempting any flow meter repair, verify that the line is not pressurized. Always remove main power before disassembling any part of the mass flow meter.

Hidden Diagnostics Menus

The menus shown on the following page can be accessed using the password 16363, then moving to the display that reads “Diagnostics Menu” and pressing ENTER (rather than one of the arrow keys).

Use the right arrow key to move to the second level. Press EXIT to move from the second level back to the first, press EXIT while in the first level to return to the setup menus.

Caution: password 16363 will allow full access to the configuration and should be used carefully to avoid changes that can adversely alter the function of the meter.

Each of the menus on the following page will first be defined followed by specific troubleshooting steps.

Hidden Diagnostics Menus

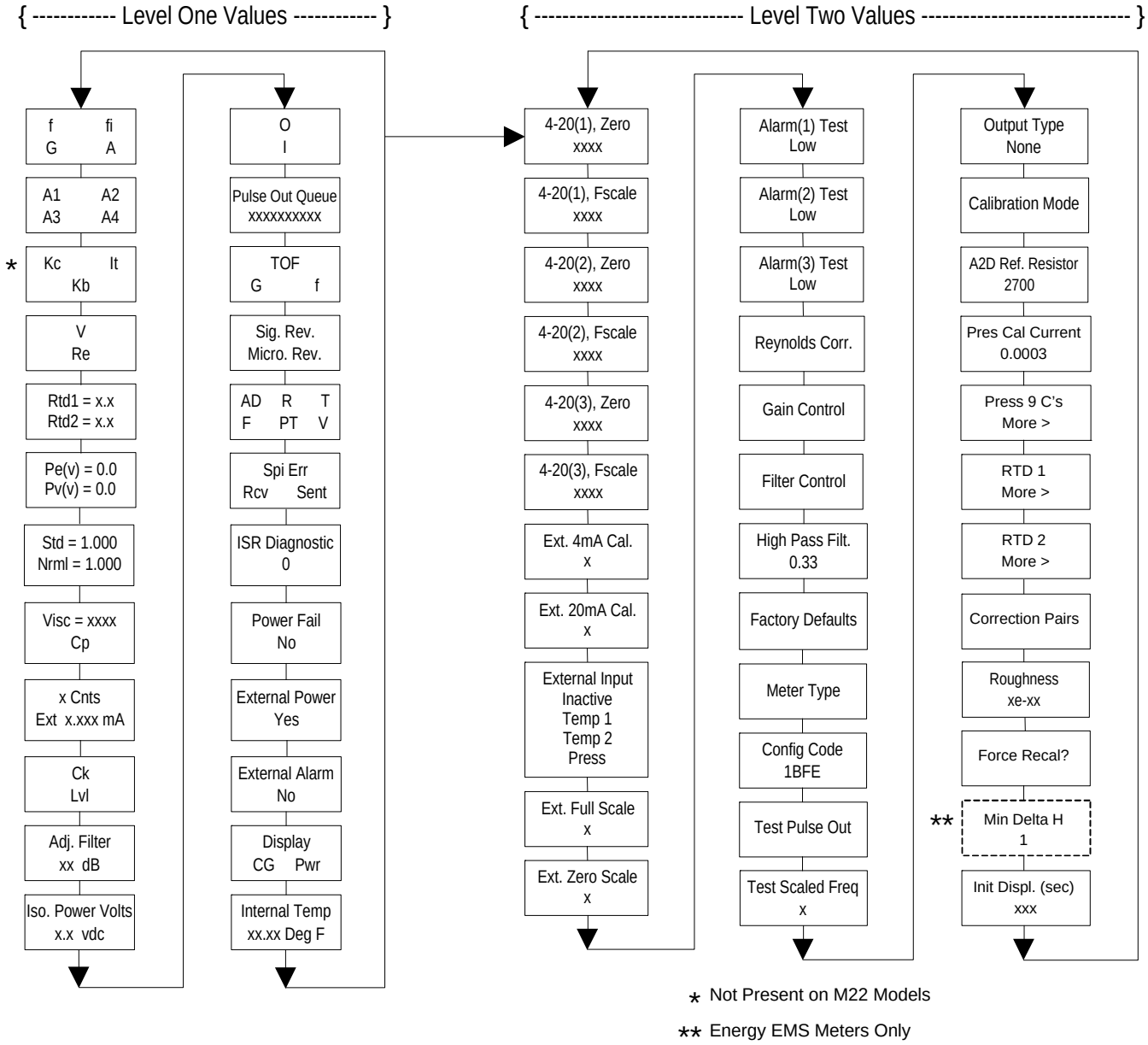

* Not Present on M22 Models

** Energy EMS Meters Only

Level One Hidden Diagnostics Values

- **f** = Vortex shedding frequency (Hz).
- **fi** = Adaptive filter – should be approximately 25% higher than the vortex shedding frequency, this is a low-pass filter. If the meter is using the Filter Control (see below) in the manual mode, **fi** will be displayed as **fm**.
- **G** = Gain (applied to vortex signal amplitude). Gain defaults to 1.0 and can be changed using the Gain Control (see below).
- **A** = Amplitude of vortex signal in Volts rms.
- **A1, A2, A3, A4** = A/D counts representing the vortex signal amplitude. Each stage (A1-A4) cannot exceed 512. Beginning with stage A1, the A/D counts increase as the flow increases. When stage A1 reaches 512, it will shift to stage A2. This will continue as the flow rate increases until all 4 stages read 512 at high flow rates. Higher flow rates (stronger signal strength) will result in more stages reading 512.
- **Kc, It, Kb** = Profile equation (factory use only). Model 241 only
- **V** = Calculated average pipe velocity (ft/sec).
- **Re** = Calculated Reynolds number.
- **RTD1** = Resistance value of integral RTD in ohms.
- **RTD2** = Optional RTD resistance value in ohms.
- **Pe(v)** = Pressure transducer excitation voltage
- **Pv(v) =** Pressure transducer sense voltage.
- **Stnd** = Density of fluid at standard conditions.
- **Nrml =** Density of fluid at normal conditions.
- **Viscosity** = Calculated viscosity of flowing fluid.
- **x Cnts** = A/D counts from the external 4-20 mA input.
- **Ext x.xxx mA** = Calculated external 4-20 mA input from the digital counts.
- **Ck** = Calculated Ck at current operating conditions. Ck is a variable in the equation that relates signal strength, density, and velocity for a given application. It is used for noise rejection purposes. Ck directly controls the fi value (see above). If the Ck is set too low (in the calibration menu), then the fi value will be too low and the vortex signal will be rejected resulting in zero flow rate being displayed. The calculated Ck value in this menu can be compared to the actual Ck setting in the calibration menu to help determine if the Ck setting is correct.

- **Lvl** = Threshold level. If the Low Flow Cutoff in the calibration menu is set above this value, the meter will read zero flow. The Lvl level can be checked at no flow. At no flow, the Lvl must be below the Low Flow Cutoff setting or the meter will have an output at no flow.
- **Adj. Flilter** = Adjustable filter. Displays the filtering in decibels. Normally reads zero. If this value is consistently -5 or -10, for example, the Ck or density setting may be wrong.
- **Iso. Power Volts** = Nominally 2.7 VDC, if less than this check the flow meter input power.
- **O,I** = Factory use only.
- **Pulse Out Queue** = Pulse output queue. This value will accumulate if the totalizer is accumulating faster than the pulse output hardware can function. The queue will allow the pulses to "catch up" later if the flow rate decreases. A better practice is to slow down the totalizer pulse by increasing the value in the (unit)/pulse setting in the totalizer menu.
- **TOF, G, f** = Factory use only.
- **Sig. Rev** = Signal board hardware and firmware revision.
- **Miro Rev** = Microprocessor board hardware and firmware revision.
- **AD, R, T, F, PT, V** = Factory use only.
- **SPI Err, Rcv, Sent** = Factory use only.
- **ISR Diagnostic =** Factory use only.
- **Power Fail =** Factory use only.
- **External Power =** Factory use only.
- **External Alarm =** Factory use only.
- **Display CG, PWR =** Factory use only.
- **Internal Temperature =** Electronics temperature.

Level Two Hidden Diagnostics Values

- **4-20(1) Zero** = Analog counts to calibrate zero on analog output 1.
- **4-20(1) FScale** = Analog counts to cal. full scale on analog output 1.
- **4-20(2) Zero** = Analog counts to calibrate zero on analog output 2.

- **4-20(2) FScale** = Analog counts to cal. full scale on analog output 2.
- **4-20(3) Zero** = Analog counts to calibrate zero on analog output 3.
- **4-20(3) FScale** = Analog counts to cal. full scale on analog output 3.
- **Ext. 4 mA Cal.** = Enter 0 for auto calibration or enter factory supplied A/D counts. Note: You must connect a known 4.00 mA input if you are going to calibrate the unit.
- **Ext. 20 mA Cal.** = Enter 0 for auto calibration or enter factory supplied A/D counts. Note: You must connect a known 20.00 mA input if you are going to calibrate the unit.
- **External Input** = Enter what the external 4-20 mA input represents, i.e. Temperature 1, Temperature 2, or Pressure. The meter will use this for its internal calculations.
- **Ext. Full Scale** = Enter the full scale units that correlate to the 20 mA point. Note: It must be in the units for the selected input type such as Deg F, Deg C, PSIA, Bar A, etc.
- **Ext. Zero Scale** = Same as above but for the 4 mA point.
- **Alarm (1) Test** = Used as a test to verify that the alarm circuit is functioning. When low is selected the alarm will initiate a low alarm on the output. When High is selected it will give a high alarm on the output.
- **Alarm (2) Test** = Used as a test to verify that the alarm circuit is functioning. When low is selected the alarm will initiate a low alarm on the output. When High is selected it will give a high alarm on the output.
- **Alarm (3) Test** = Used as a test to verify that the alarm circuit is functioning. When low is selected the alarm will initiate a low alarm on the output. When High is selected it will give a high alarm on the output.
- **Reynolds Corr.** = Reynolds number correction for the flow profile. Set to Enable for 241 insertion and set to Disable for 240 inline.
- **Gain Control** = Manual gain control (factory use only). Leave set at 1.
- **Filter control** = Manual filter control. This value can be changed to any number to force the fi value to a constant. A value of zero activates the automatic filter control which sets fi at a level that floats above the f value.
- **High Pass Filter =** Filter setting – Factory use only

- **Factory Defaults** = Reset factory defaults. If you change this to Yes and press Enter, all the factory configuration is lost and you must reconfigure the entire program. Consult the factory before performing this process, it is required only in very rare cases.
- **Meter Type** = Insertion (241) or Inline (240) meter.
- **Config Code =** Factory use only.
- **Test Pulse Out** = Force totalizer pulse. Set to Yes and press enter to send one pulse. Very useful to test totalizer counting equipment.
- **Test Scaled Freq** = Enter a frequency value in order to test the scaled frequency output. Return to 0 to stop the test.
- **Output Type** = Factory use only.
- **Calibration Mode** = Factory use only.
- **A2D Ref. Resistor =** Factory use only.
- **Pressure Cal Current** = Calibration value for the electronics and pressure transducer combination. Consult Factory for value.
- **Pressure 9Cs** = Nine pressure coefficients unique to the pressure transducer. Use the RIGHT ARROW to access all nine coefficients.
    - **Press. Max psi** = Based on installed sensor.
- **Press. Min psi =** 0 psia**RTD1.** Press the RIGHT ARROW to access:
    - **Ro** = RTD resistance at 0°C (1000 ohms).
    - **A** = RTD coefficient A (.0039083).
    - **B** = RTD coefficient B (-5.775e-07).
    - **RTD1 Max Deg. F =** 500
    - **RTD1 Min Deg. F =** -330
- **RTD2** = Second RTD configuration, for special applications only.
- **Correction Pairs**
    - **ft3/sec** (1 through 10)
    - **%Dev.** (1 through 10)
- **Roughness** = Factory use only.
- **Force Recal?** = Factory use only.
- **Min. Delta H –** Energy EMS meters only. Sets the deadband for totalization to begin. Must be greater than this number (1 default) to initiate the totalizer.

- **Init Displ. (sec)** = Enter a value in seconds to initialize the display every xxx seconds. Enter a value of 0 to disable initializing the display.

Analog Output Calibration

To check the 4–20 mA circuit, connect a DVM in series with the output loop. Select zero or full scale (from the second level of the hidden diagnostics) and then actuate the enter key twice. This action will cause the meter to output its 4 mA or 20 mA condition. If the DVM indicates a current greater than ± 0.006 mA from 4 or 20, adjust the setting up or down until the output is calibrated.

Note: these settings are not for adjusting the output zero and span to match a flow range, that function is located in the Output Menu.

Troubleshooting the Flow Meter

Warning!
Before attempting any flow meter repair, verify that the line is not pressurized. Always remove main power before disassembling any part of the mass flow meter. Use hazardous area precautions if applicable. Static sensitive electronics - use electro-static discharge precautions.

First Check Items:

- ☐ Installation Direction Correct
- ☐ Installation Depth Correct (Insertion style meter)
- ☐ Power and Wiring Correct
- ☐ Application Fluid Correct
- ☐ Meter Range Correct for the Application
- ☐ Meter Configuration Correct
- ☐ Describe Installation Geometry i.e. upstream diameters, valve position, downstream diameters, etc.

Record Values:

Record the following values from the Run Menu with the meter installed in order to determine the operating state of the flow meter:

	With Flow	With No Flow (if possible)
Flow =		
Temperature=		
Pressure =		
Density =		
Error Messages? =		

Record the following values from the Hidden Diagnostics Menu with the meter installed:
(Use password 16363 to access.)

	With Flow	With No Flow (if possible)
f =		
fi =		
A =		
A1 =		
A2 =		
A3 =		
A4 =		
V =		
RTD1 =		
RTD2 =		

Record values - Hidden Diagnostics Menu continued:

	With Flow	With No Flow (if possible)
Pe(V) =		
Pv(V) =		
Ck =		
Lvl =		
Adj. Filter =		
Iso. Power Volts =		
Sig. Rev =		

Record the following values from the Calibration Menu.

Vortex Coef Ck =	
Low Flow Cutoff =	

Determine the Fault

Symptom: Output at no Flow

1. The low flow cutoff is set too low. At no flow, go to the first level of the hidden diagnostics menu and record the Lvl value. The low flow cutoff must be set above this value.
2. Example: at no flow , Lvl = 25. Set the low flow cutoff in the Calibration Menu to approximately 28 and the meter will no longer read a flow rate at no flow.

Symptom: Erratic Output

1. The flow rate may be too low, just at the cutoff of the meter range, and the flow cycles above and below the cutoff making an erratic output. Consult the factory if necessary to confirm the meter range based on current operating conditions. It may be possible to lower the low flow cutoff to increase the meter range. See the example above for output at no flow, only this time the low flow cutoff is set too high. You can lower this value to increase the meter range as long as you do not create the output at no flow condition previously described.

2. Mechanical installation may be incorrect. Verify the straight run is adequate as described in Chapter 2. For in-line meters, make sure the meter is not installed backwards and there are no gaskets protruding into the flow stream. For insertion meters, verify the insertion depth and flow direction.

3. The meter may be reacting to actual changes in the flow stream. The output can be smoothed using a time constant. The displayed values can be smoothed using the time constant in the Display Menu. The analog outputs can be smoothed using the time constant in the Output Menu. A time constant of 1 will result in the change in value reaching 63% of its final value in one second. A time constant of 4 is 22%, 10 is 9.5% and 50 is 1.9% of the final value in one second. The time constant equation is shown below (TC = Time Constant).

$$\text{\% change to final value in one second} = 100\left(1 - e^{(-1/TC)}\right)$$

4. The vortex coefficient Ck may be incorrectly set. The Ck is a value in the equation used to determine if a frequency represents a valid vortex signal given the fluid density and signal amplitude. In practice, the Ck value controls the adaptive filter, fi, setting. During flow, view the f and fi values in the first level of the hidden diagnostics. The fi value should be approximately 10-20 % higher than the f value. If you raise the Ck setting in the Calibration Menu, then the fi value will increase. The fi is a low pass filter, so by increasing it or lowering it, you can alter the range of frequencies that the meter will accept. If the vortex signal is strong, the fi value will increase to a large number – this is correct.

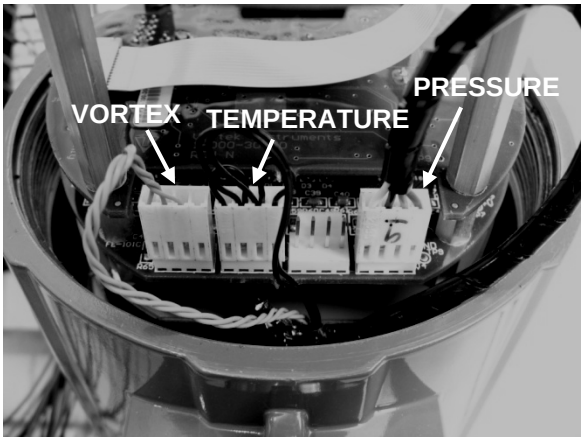

Figure 5-1.Electronics Stack Sensor Connections

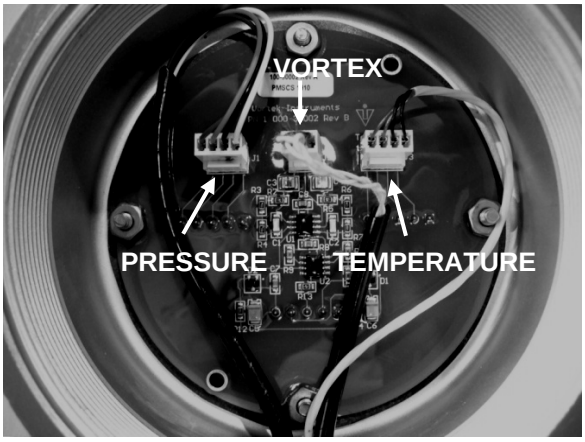

Figure 5-2.Remote Feed Through Board Sensor Connections

Symptom: No Output

1. For remote mounted electronics, carefully check all the wiring connections in the remote mount junction box. There are 18 connections that must be correct, verify each color (black and red), shield, and wire number.

2. Turn on the pressure and temperature display in the Display Menu and verify that the pressure and temperature are correct.

3. Using ESD precautions and hazardous area precautions, remove the electronics enclosure window cover. Disconnect the vortex sensor from the electronics stack or remote feed through board. Refer to Figure 5-1 or 5-2. Measure the resistance from each outside pin to the meter ground - each should be open. Measure the resistance from the center pin to the meter ground – this should be grounded to the meter.

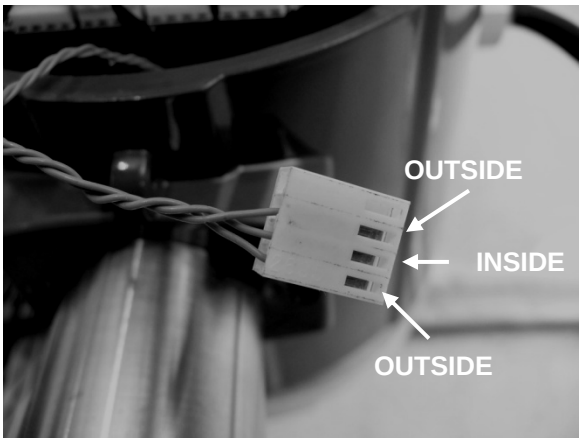

Figure 5-3.Vortex Sensor Connector

With the sensor still disconnected, go to the first level of the hidden diagnostics and display the vortex shedding frequency, f. Hold a finger on the three exposed pins on the analog board. The meter should read electrical noise, 60 Hz for example. If all readings are correct, re-install vortex sensor wires.

4. Verify all meter configuration and troubleshooting steps previously described. There are many possible causes of this problem, consult factory if necessary.

Symptom: Meter Displays Temperature Fault

1. For remote mounted electronics, carefully check all the wiring connections in the remote mount junction box. There are 18 connections that must be correct, verify each color (black and red), shield, and wire number.

2. Go to the first level of the hidden diagnostics and check the resistance of the rtd1. It should be about 1080 ohms at room temperature.

3. Using ESD precautions and hazardous area precautions, remove the electronics enclosure window cover. Disconnect the temperature sensor from the electronics stack or the remote feed through board. Refer to Figure 5-1 or 5-2. Measure the resistance across the outside pins of the temperature sensor connector. It should read approximately 1080 ohms at room temperature (higher resistance at higher temperatures).

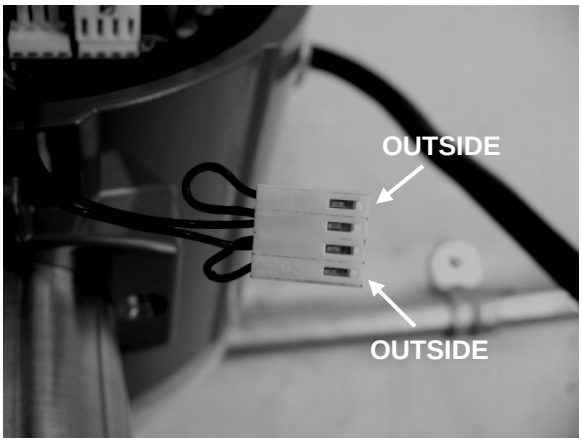

Figure 5-4.Temperature Sensor Connector

4. Consult factory with findings

Symptom: Meter Displays Pressure Fault

1. For remote mounted electronics, carefully check all the wiring connections in the remote mount junction box. There are 18 connections that must be correct, verify each color (black and red), shield, and wire number.

2. Using ESD precautions and hazardous area precautions, remove the electronics enclosure window cover. Disconnect the pressure sensor from the electronics stack or the remote feed through board. Measure the resistance across the outside pins of the pressure sensor connector, then across the inside pins. Both readings should be approximately 4000 ohms.

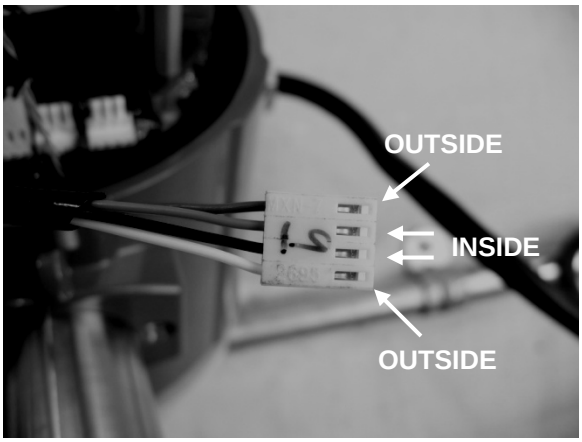

Figure 5-5.Pressure Sensor Connector

3. Go to the first level of the hidden diagnostics and record the Pe(V) and Pv(V) values and consult the factory with findings.

Electronics Assembly Replacement (All Meters)

The electronics boards are electrostatically sensitive. Wear a grounding wrist strap and make sure to observe proper handling precautions required for static-sensitive components.

Before attempting any flow meter repair, verify that the line is not pressurized. Always remove main power before disassembling any part of the mass flow meter.

1. Turn off power to the unit.

2. Locate and loosen the small set screw which locks the larger enclosure cover in place. Unscrew the cover to expose the electronics stack.

3. Locate the sensor harnesses which come up from the neck of the flow meter and attaches to the circuit boards. Make note of the location of each sensor connection. Refer to figures 5-1 and 5-2. The vortex sensor connection is on the left, the temperature sensor connection (if present) is second form the left, and the pressure sensor connection (if present) is the right most connector. Use small pliers to pull the sensor wiring connectors off of the circuit boards.

4. Locate and loosen the small set screw which locks the smaller enclosure cover in place. Unscrew the cover to expose the field wiring strip. Tag and remove the field wires.

5. Remove the screws that hold the black wiring label in place, remove the label.

6. Locate the 4 Phillips head screws which are spaced at 90-degrees around the terminal board. These screws hold the electronics stack in the enclosure. Loosen these screws (Note: that these are captive screws, they will stay inside the enclosure).

7. Carefully remove the electronics stack from the opposite side of the enclosure. If the electronics stack will not come out, gently tap the terminal strip with the screw driver handle. This will loosen the rubber sealing gasket on the other side of the enclosure wall. Be careful that the stack does not hang up on the loose sensor harnesses.

8. Repeat steps 1 through 6 in reverse order to install the new electronics stack.

Pressure Sensor Replacement (Series 240 Only)

1. For local mounted electronics, remove the electronics stack as previously described. For remote mount electronics, remove all wires and sensor connectors from the remote feed through board in the junction box at the meter.
2. Loosen the three set screws at the center of the adapter between the meter and the enclosure.
3. Remove the top half of the adapter to expose the pressure transducer.
4. Remove the transducer and replace it with the new one using appropriate thread sealant.
5. Reassemble in reverse order.

Returning Equipment to the Factory

Before returning any Innova-Massflow meter to the factory, you must request a Return Material Authorization (RMA) number. To obtain an RMA number and the correct shipping address, contact Customer Service at:

800-866-0200 or 831-373-0200 in the USA
www.sierrainstruments.com

When contacting Customer Service, be sure to have the meter serial number and model code.

Please see the Meter Troubleshooting Checklist for additional items which may help with problem isolation. When requesting further troubleshooting guidance, please record the values on the checklist at no flow and during flow if possible.

Appendix A Product Specifications

Accuracy

Process Variables	240 Series In-Line Meters		241 Series Insertion Meters(1)	
	Liquids	Gas & Steam	Liquids	Gas & Steam
Mass Flow Rate	±1% of rate over a 30:1 range(3)	±1.5% of rate(2) over a 30:1 range(3)	±1.5% of rate over a 30:1 range(3)	±2% of rate(2) over a 30:1 range(3)
Volumetric Flow Rate	±0.7% of rate over a 30:1 range(3)	±1% of rate over a 30:1 range(3)	±1.2% of rate over a 30:1 range(3)	±1.5% of rate over a 30:1 range(3)
Temperature	± 2° F (± 1° C)	± 2° F (± 1° C)	± 2° F (± 1° C)	± 2° F (± 1° C)
Pressure	0.3% of transducer full scale	0.3% of transducer full scale	0.3% of transducer full scale	0.3% of transducer full scale
Density	0.3% of reading	0.5% of reading(2)	0.3% of reading	0.5% of reading(2)

Notes: (1) Accuracies stated are for the total mass flow through the pipe.
(2) Over 50 to 100% of the pressure transducer's full scale.
(3) Nominal rangeability is stated. Precise rangeability depends on fluid and pipe size.

Repeatability

Mass Flow Rate: 0.2% of rate.
Volumetric Flow Rate: 0.1% of rate.
Temperature: ± 0.2° F (± 0.1° C).
Pressure: 0.05% of full scale.
Density: 0.1% of reading.

Stability Over 12 Months

Mass Flow Rate: 0.2% of rate maximum.
Volumetric Flow Rate: Negligible error.
Temperature: ± 0.1° F (± 0.5° C) maximum.
Pressure: 0.1% of full scale maximum.
Density: 0.1% of reading maximum.

Response Time

Adjustable from 1 to 100 seconds.

Material Capability

Series 240 In-Line Flow Meter:
Any gas, liquid or steam compatible with 316L stainless steel, C276 hastelloy or A105 carbon steel. Not recommended for multi-phase fluids.

Series 241 Insertion Flow Meter:
Any gas, liquid or steam compatible with 316L stainless steel. Not recommended for multi-phase fluids.

Flow Rates

Typical mass flow ranges are given in the following table. Precise flow depends on the fluid and pipe size. 241 insertion meters are applicable to pipe sizes from 2 inch and above. Consult factory for sizing program.

Water Minimum and Maximum Flow Rates									
	½-inch	¾-inch	1-inch	1.5-inch	2-inch	3-inch	4-inch	6-inch	8-inch
	15 mm	20 mm	25 mm	40 mm	50 mm	80 mm	100 mm	150 mm	200 mm
gpm	1 22	1.3 40	2.2 67	5.5 166	9.2 276	21 618	36 1076	81 2437	142 4270
m^3/hr	.23 5	.3 9.1	0.5 15	1.3 38	2.1 63	4.7 140	8.1 244	18 554	32 970

Typical Air Minimum and Maximum Flow Rates (SCFM)									
Air at 70°F									
	Nominal Pipe Size (in)								
Pressure	0.5	0.75	1	1.5	2	3	4	6	8
0 psig	1.8 18	3 41	5 90	13 221	22 369	50 826	87 1437	198 3258	347 5708
100 psig	5 138	9 325	15 704	38 1730	63 2890	141 6466	245 11254	555 25515	972 44698
200 psig	7 258	13 609	21 1322	52 3248	86 5427	193 12140	335 21131	761 47911	1332 83931
300 psig	8 380	15 896	25 1944	63 4775	104 7978	234 17847	407 31064	922 70431	1615 123375
400 psig	10 502	18 1183	29 2568	72 6309	120 10542	269 23580	467 41043	1060 93057	1857 163000
500 psig	11 624	20 1472	33 3195	80 7849	134 13115	300 28034	521 51063	1182 115775	2071 203000

Typical Air Minimum and Maximum Flow Rates (nm^3/hr)									
Air at 20°C									
	Nominal Pipe Size (mm)								
Pressure	15	20	25	40	50	80	100	150	200
0 barg	3 28	5 66	9 142	21 350	36 584	79 1307	138 2275	313 5157	549 9034
5 barg	7 165	13 390	21 847	52 2080	87 3476	194 7775	337 13533	764 30682	1339 53749
10 barg	9 304	17 716	29 1554	70 3819	117 6381	262 14273	457 24844	1035 56329	1814 98676
15 barg	11 442	21 1044	34 2265	85 5565	142 9299	317 20801	551 36205	1250 82087	2190 143801
20 barg	13 582	24 1373	40 2979	97 7318	162 12229	363 27354	632 47612	1434 107949	2511 189105
30 barg	16 862	29 2034	48 4414	118 10843	198 18119	442 40529	770 70544	1745 159942	3057 280187

Linear Range

Smart electronics corrects for lower flow down to a Reynolds number of 5,000. The Reynolds number is calculated using the fluid's actual temperature and pressure monitored by the meter. Rangeability depends on the fluid, process connections and pipe size. Consult factory for your application. Typical velocity range ability in standard applications is as follows:

Liquids 30:1 — 1 foot per second velocity minimum
30 feet per second velocity maximum

Gases 30:1 — 10 feet per second velocity minimum
300 feet per second velocity maximum

Typical Saturated Steam Minimum and Maximum Flow Rates (lb/hr)									
	Nominal Pipe Size (in)								
Pressure	0.5	0.75	1	1.5	2	3	4	6	8
5 psig	6.5	12	20	49	82	183	318	722	1264
	52	122	265	650	1087	2431	4231	9594	16806
100 psig	15	27	46	112	187	419	728	1652	2893
	271	639	1386	3405	5690	12729	22156	50233	87998
200 psig	20	37	62	151	253	565	983	2229	3905
	493	1163	2525	6203	10365	23184	40354	91494	160279
300 psig	24	45	74	182	304	680	1184	2685	4704
	716	1688	3664	9000	15040	33642	58556	132763	232575
400 psig	28	51	85	209	349	780	1358	3079	5393
	941	2220	4816	11831	19770	44222	76971	174516	305717
500 psig	31	57	95	233	389	870	1514	3433	6014
	1170	2760	5988	14711	24582	54987	95710	217001	380148

Typical Saturated Steam Minimum and Maximum Flow Rates (kg/hr)									
	Nominal Pipe Size (mm)								
Pressure	15	20	25	40	50	80	100	150	200
0 barg	3	5	8	19	32	72	126	286	500
	18	42	91	224	375	838	1459	3309	5797
5 barg	6	11	18	45	75	167	290	658	1153
	95	224	485	1192	1992	4455	7754	17581	30799
10 barg	8	15	24	59	99	222	387	877	1537
	168	397	862	2118	3539	7915	13777	31237	54720
15 barg	9	17	29	71	119	266	463	1050	1840
	241	569	1236	3036	5073	11347	19750	44779	78444
20 barg	11	20	33	81	136	304	529	1199	2100
	314	742	1610	3956	6611	14787	25738	58355	102226
30 barg	13	24	40	99	165	369	642	1455	2548
	463	1092	2370	5822	9729	21763	37880	85884	150451

Linear Range

Smart electronics corrects for lower flow down to a Reynolds number of 5,000. The Reynolds number is calculated using the fluid's actual temperature and pressure monitored by the meter. Rangeability depends on the fluid, process connections and pipe size. Consult factory for your application. Typical velocity range ability in standard applications is as follows:

Liquids 30:1 — 1 foot per second velocity minimum
30 feet per second velocity maximum

Gases 30:1 — 10 feet per second velocity minimum
300 feet per second velocity maximum

Process Fluid Pressure

240 Pressure Ratings		
Process Connection	Material	Rating
Flanged	316L SS, A105 Carbon Steel, C276 Hastelloy	150, 300, 600 lb, PN16, PN40, PN64
Wafer	316L SS, A105 Carbon Steel, C276 Hastelloy	600 lb, PN64

241 Pressure Ratings				
Probe Seal	Process Connection	Material	Rating	Ordering Code
Compression Fitting	2-inch MNPT	316L SS	ANSI 600 lb	CNPT
	2-inch 150 lb flange, DN50 PN16	316L SS	ANSI 150 lb, PN16	C150, C16
	2-inch 300 lb flange, DN50 PN40	316L SS	ANSI 300 lb, PN40	C300, C40
	2-inch 600 lb flange, DN50 PN64	316L SS	ANSI 600 lb, PN64	C600, C64
Packing Gland	2-inch MNPT	316L SS	50 psig	PNPT
	2-inch 150 lb flange, DN50 PN16	316L SS	50 psig	P150, P16
	2-inch 300 lb flange, DN50 PN40	316L SS	50 psig	P300, P40
Packing Gland with Removable Retractor	2-inch MNPT	316L SS	ANSI 300 lb	PM, RR
	2-inch 150 lb flange, DN50, PN16	316L SS	ANSI 150 lb	P150, P16,RR
	2-inch 300 lb flange	316L SS	ANSI 300 lb	P300, P40, RR
Packing Gland with Permanent Retractor	2-inch MNPT	316L SS	ANSI 600 lb	PNPTR
	2-inch 150 lb flange, DN50 PN16	316L SS	ANSI 150 lb	P150R, P16R
	2-inch 300 lb flange, DN50, PN40	316L SS	ANSI 300 lb	P300R, P40R
	2-inch 600 lb flange, DN50 PN64	316L SS	ANSI 600 lb	P600R, P64R

Pressure Transducer Ranges

Pressure Sensor Ranges(1), psia (bara)			
Full Scale Operating Pressure		Maximum Over-Range Pressure	
psia	(bara)	psia	(bara)
30	2	60	4
100	7	200	14
300	20	600	40
500	35	1000	70
1500	100	2500	175

Note: (1) To maximize accuracy, specify the lowest full scale operating pressure range for the application. To avoid damage, the flow meter must never be subjected to pressure above the over-range pressure shown above.

Power Requirements

12 to 36 VDC, 25 mA, 1 W max., Loop Powered Volumetric or Mass
12 to 36 VDC, 300 mA, 9 W max. Multiparameter Mass options
100 to 240 VAC, 50/60 Hz, 5 W max. Multiparameter Mass options

Class I Equipment (Grounded Type)

Installation (Over-voltage) Category II for transient over-voltages

AC & DC Mains supply voltage fluctuations are not to exceed +/-10% of the rated supply voltage range.

	User is responsible for the provision of an external Disconnect Means (and Over-Current Protection) for the equipment (both AC and DC models).
Display	Alphanumeric 2 x 16 LCD digital display. Six push-button switches (up, down, right, left, enter, exit) operable through explosion-proof window using hand-held magnet. Viewing at 90-degree mounting intervals.
Pocess Fluid and Ambient Temperature	Process Fluid: Standard temperature sensor: –330 to 500° F (–200 to 260°C) High temperature sensor: to 750° F (400° C) Ambient: Operating temperature range: –40 to 140° F (–40 to 60° C) Storage temperature range: –40 to 185° F (–40 to 85° C) Maximum relative humidity: 0-98%, non-condensing conditions Maximum altitude: -2000 to 14,000 feet (-610 to 4268 meters) Pollution Degree 2 for the ambient environment
Output Signals (1)	Analog: Volumetric Meter: field rangeable linear 4-20 mA output signal (1200 Ohms maximum loop resistance) selected by user for mass flow rate or volumetric flow rate. Communications: HART, MODBUS, RS485 Multiparameter Meter: up to three field rangeable linear 4-20 mA output signals (1200 Ohms maximum loop resistance) selected from the five parameters–mass flow rate, volumetric flow rate, temperature, pressure and density. Pulse:Pulse output for totalization is a 50-millisecond duration pulse operating a solid-state relay capable of switching 40 VDC, 40 mA maximum. Note: (1) All outputs are optically isolated and require external power for operation.
Alarms	Up to three programmable solid-state relays for high, low or window alarms capable of switching 40 VDC, 40 mA maximum.
Totalizer	Based on user-determined flow units, six significant figures in scientific notation. Total stored in non-volatile memory.
Wetted Materials	Series 240 In-Line Flow Meter: 316L stainless steel standard. C276 hastelloy or A105 carbon steel optional. Series 241 Insertion Flow Meter: 316L stainless steel standard. Teflon® packing gland below 500° F (260° C). Graphite packing gland above 500° F (260° C).
Enclosure Protection Classification	NEMA 4X and IP66 cast enclosure.
Electrical Ports	Two 3/4-inch female NPT ports.
Mounting Connections	Series 240: Wafer, 150, 300, 600 lb ANSI flange, PN16, PN40, PN64 flange. Series 241 Permanent installation: 2-inch MNPT; 150, 300, 600 lb ANSI flange, PN16, PN40, PN64 flange with compression fitting probe seal. Series 241 Hot Tap(1) Installation: 2-inch MNPT; 150, 300, 600 lb ANSI flange, PN16, PN40, PN64 flange and optional retractor with packing gland probe seal. Note: (1) Removable under line pressure.

Mounting Position	Series 240 In-Line Flow Meter: No effect. Series 241 Insertion Flow Meter: Meter must be perpendicular within ± 5° of the pipe centerline.
Certifications	Material Certificate – US Mill certs on all wetted parts Pressure Test Certificate Certificate of Conformance NACE Certification (MR0175) Oxygen Cleaning (CGA G-4.

Ordering the Model 240 In-Line

240 [ ] [ ]

Continued on Next Page >>

PARENT MODEL NUMBER

240	Innova-Mass™ Multivariable In-line Mass Vortex Flow Meter

PROCESS FLUID

V	Volumetric Vortex Flow Meter
VT	Velocity and Temperature Sensors
VTP	Velocity, Temperature and Pressure Sensors
VTEP	Velocity and Temperature Sensors with external pressure sensor output
VT EMS	VT Meter plus Energy meter Package.
VTP EMS	VTP Meters plus Energy meter package.

FLOW BODY–316L STAINLESS STEEL

F2	1/2-inch ANSI 150 lb Flanged, 316L
F3	3/4-inch ANSI 150 lb Flanged, 316L
F4	1-inch ANSI 150 lb Flanged, 316L
F5	1.5-inch ANSI 150 lb Flanged, 316L
F6	2-inch ANSI 150 lb Flanged, 316L
F7	3-inch ANSI 150 lb Flanged, 316L
F8	4-inch ANSI 150 lb Flanged, 316L
F9	6-inch ANSI 150 lb Flanged, 316L
F10	8-inch ANSI 150 lb Flanged, 316L
Also available in C276 Hastalloy. Consult Factory For Pricing/Delivery	
G2	1/2-inch ANSI 300 lb Flanged, 316L
G3	3/4-inch ANSI 300 lb Flanged, 316L
G4	1-inch ANSI 300 lb Flanged, 316L
G5	1.5-inch ANSI 300 lb Flanged, 316L
G6	2-inch ANSI 300 lb Flanged, 316L
G7	3-inch ANSI 300 lb Flanged, 316L
G8	4-inch ANSI 300 lb Flanged, 316L
G9	6-inch ANSI 300 lb Flanged, 316L
G10	8-inch ANSI 300 lb Flanged, 316L
Also available in C276 Hastalloy. Consult Factory For Pricing/Delivery	
H2	1/2-inch ANSI 600 lb Flanged, 316L
H3	3/4-inch ANSI 600 lb Flanged, 316L
H4	1-inch ANSI 600 lb Flanged, 316L
H5	1.5-inch ANSI 600 lb Flanged, 316L
H6	2-inch ANSI 600 lb Flanged, 316L
H7	3-inch ANSI 600 lb Flanged, 316L
H8	4-inch ANSI 600 lb Flanged, 316L
H9	6-inch ANSI 600 lb Flanged, 316L
H10	8-inch ANSI 600 lb Flanged, 316L
Also available in C276 Hastalloy. Consult Factory For Pricing/Delivery	
W2	0.5-inch Wafer connection, 316L
W3	3/4-inch Wafer connection, 316L
W4	1-inch Wafer connection, 316L
W5	1.5-inch Wafer connection, 316L
W6	2-inch Wafer connection, 316L
W7	3-inch Wafer connection, 316L
W8	4-inch Wafer connection, 316L
Also available in C276 Hastalloy. Consult Factory For Pricing/Delivery	
FC4	1-inch ANSI 150 lb Flanged, Carbon Steel
FC5	1.5-inch ANSI 150 lb Flanged, Carbon Steel
FC6	2-inch ANSI 150 lb Flanged, Carbon Steel
FC7	3-inch ANSI 150 lb Flanged, Carbon Steel
FC8	4-inch ANSI 150 lb Flanged, Carbon Steel
FC9	6-inch ANSI 150 lb Flanged, Carbon Steel
FC10	8-inch ANSI 150 lb Flanged, Carbon Steel
Also available in C276 Hastalloy. Consult Factory For Pricing/Delivery	

FLOW BODY–316L STAINLESS STEEL (CONTINUED)

GC4	1-inch ANSI 300 lb Flanged, Carbon Steel
GC5	1.5-inch ANSI 300 lb Flanged, Carbon Steel
GC6	2-inch ANSI 300 lb Flanged, Carbon Steel
GC7	3-inch ANSI 300 lb Flanged, Carbon Steel
GC8	4-inch ANSI 300 lb Flanged, Carbon Steel
GC9	6-inch ANSI 300 lb Flanged, Carbon Steel
GC10	8-inch ANSI 300 lb Flanged, Carbon Steel
Also available in C276 Hastalloy. Consult Factory For Pricing/Delivery	
HC4	1-inch ANSI 600 lb Flanged, Carbon Steel
HC5	1.5-inch ANSI 600 lb Flanged, Carbon Steel
HC6	2-inch ANSI 600 lb Flanged, Carbon Steel
HC7	3-inch ANSI 600 lb Flanged, Carbon Steel
HC8	4-inch ANSI 600 lb Flanged, Carbon Steel
HC9	6-inch ANSI 600 lb Flanged, Carbon Steel
HC10	8-inch ANSI 600 lb Flanged, Carbon Steel
Also available in C276 Hastalloy. Consult Factory For Pricing/Delivery	
FD2	DN15/PN16 Flanged, 316L
FD3	DN20/PN16 Flanged, 316L
FD4	DN25/PN16 Flanged, 316L
FD5	DN40/PN16 Flanged, 316L
FD6	DN50/PN16 Flanged, 316L
FD7	DN80/PN16 Flanged, 316L
FD8	DN100/PN16 Flanged, 316L
FD9	DN150/PN16 Flanged, 316L
FD10	DN200/PN16 Flanged, 316L
Also available in C276 Hastalloy. Consult Factory For Pricing/Delivery	
GD2	DN15/PN40 Flanged, 316L
GD3	DN20/PN40 Flanged, 316L
GD4	DN25/PN40 Flanged, 316L
GD5	DN40/PN40 Flanged, 316L
GD6	DN50/PN40 Flanged, 316L
GD7	DN80/PN40 Flanged, 316L
GD8	DN100/PN40 Flanged, 316L
GD9	DN150/PN40 Flanged, 316L
GD10	DN200/PN40 Flanged, 316L
Also available in C276 Hastalloy. Consult Factory For Pricing/Delivery	
HD2	DN15/PN64 Flanged, 316L
HD3	DN20/PN64 Flanged, 316L
HD4	DN25/PN64 Flanged, 316L
HD5	DN40/PN64 Flanged, 316L
HD6	DN50/PN64 Flanged, 316L
HD7	DN80/PN64 Flanged, 316L
HD8	DN100/PN64 Flanged, 316L
HD9	DN150/PN64 Flanged, 316L
HD10	DN200/PN64 Flanged, 316L
Also available in C276 Hastalloy. Consult Factory For Pricing/Delivery	

Ordering the Model 240 In-Line (Continued)

240 [ ] [ ] [ ] [ ] [ ] [ ] [ ]

*From Previous Page

ELECTRONICS ENCLOSURE

E2	NEMA 4X (IP65) Enclosure - Mounted on Probe
E4	Remote Electronics NEMA 4X (IP65) includes NEMA 4X (IP65) on Probe Specify cable length in parentheses, maximum 50 feet (17m).

DISPLAY OPTION

NR	No Display
DD	Digital Display

INPUT POWER

PV1L	12-36 VDC LOOP POWERED (available only with V4LH)
PV1	12-36 VDC
PS	100-240 VAC, 50/60 Hz Line Power, 25 Watts

OUTPUT

V4LH	One analog output (4-20 mA), one pulse, HART. LOOP POWERED
V4H	One analog output (4-20 mA), one alarm, one pulse and HART Communication. NOT LOOP POWERED
V4M	One analog output (4-20 mA), one alarm, one pulse, and MODBUS.
V6M	Three analog outputs (4-20 mA), three alarms, one pulse, MODBUS
V6H	Three analog outputs (4-20 mA), three alarms, one pulse, HART Protocol Communication

PROCESS TEMPERATURE

ST	Standard temperature Process temperature -40° to 500°F (-40° to 260°C)
HT	High Temperature Process temperature -40° to 750°F (-40° to 400°C)

PROCESS PRESSURE

MP0	No Pressure Sensor Used with VT process fluid.
MP1	Maximum 30 psia (2 bara), Proof 60 psia (4 bara)
MP2	Maximum 100 psia (7 bara), Proof 200 psia (14 bara)
MP3	Maximum 300 psia (20 bara), Proof 600 psia (41 bara)
MP4	Maximum 500 psia (34 bara), Proof 1000 psia (64 bara)
MP5	Maximum 1500 psia (100 bara), Proof 1500 psia (100 bara)

ACCESSORIES (Consult Factory) Removable Retractors, Isolated Gate Valves, Mounting Kits, Material Certificates, Pressure Certificates, Certificate of Conformance, NACE Certification

Ordering the Model 241 Insertion

241 [ ] [ ] [ ] [ ] [ ] [ ] [ ] [ ]

PARENT MODEL NUMBER

241	Innova-Mass™ Insertion Mass Vortex Flow Meter

PROCESS FLUID

V	Vortex Flow Meter
VT	Velocity and Temperature Sensors
VTP	Velocity, Temperature and Pressure Sensors
VTEP	Velocity and Temperature Sensors with external pressure sensore output
VT EMS	VT Meter plus energy meter Package.
VTP EMS	VTP Meters plus Energy meter package.

PROBE LENGTH

LS	Standard Probe
LC	Compact Probe (available only for compressions fitting connections CM, CF, CG and CH
LE	Extended Probe (consult factory if for PMR, PFR, PGR or PHR)

ELECTRONICS ENCLOSURE

E2	NEMA 4x Enclosure. Mounted on Probe.
E4 ( )	Remote Electronics NEMA 4x (IP65) includes NEMA 4x (IP65) on probe . Specify cable length in parentheses, maximum 50ft (17m).

DISPLAY OPTION

NR	No Display
DD	Digital Display

INPUT POWER

PV1L	12-36 VDC LOOP POWERED (available only with V4LH).
PV1	12-36 VDC
PS	100-240 VAC, 50/60 Hz Line Power, 25 Watts

OUTPUT POWER

V4LH	One analog output (4-20mA), one pulse, HART, LOOP POWERED
V4H	One analog output (4-20 mA), one alarm, one pulse HART Communication, NOT LOOP POWERED.
V4M	One analog output (4-20 mA), one alarm, one pulse and MODBUS
V6M	Three analog outputs (4-20 mA), three alarms, one pulse and MODBUS
V6H	Three analog outputs (4-20 mA), three alarms, one pulse and HART Protocol Communication.

PROCESS TEMPERATURE

ST	Standard Temperature. Process temperature -40° to 460°F (-40° to 260°C)
HT	High Temperature. Process temperature -40° to 750°F (-40° to 400°C)

PROCESS PRESSURE

MP0	No Pressure Sensor Used with VT process fluid.
MP1	Maximum 30 psia (2 bara), Proof 60 psia (4 bara)
MP2	Maximum 100 psia (7 bara), Proof 200 psia (14 bara)
MP3	Maximum 300 psia (20 bara), Proof 600 psia (41 bara)
MP4	Maximum 500 psia (34 bara), Proof 1000 psia (64 bara)
MP5	Maximum 1500 psia (100 bara), Proof 1500 psia (100 bara)

ACCESSORIES (Consult Factory) Removable Retractors, Isolated Gate Valves, Mounting Kits, Material Certificates, Pressure Certificates, Certificate of Conformance, NACE Certification

Ordering the Model 241 Insertion

241 * * * * * * *

*From Previous Page

PROCESS CONNECTION

CM Compression Fitting
2-inch Male NPT, 600 lb pressure rating.

CF Compression Fitting
2-inch 150 lb Flange.

CG Compression Fitting
2-inch 300 lb Flange.

CH Compression Fitting
2-inch 600 lb Flange.

PM Packing Gland
2-inch Male NPT, 50 psig (3.5 barg) maximum process pressure without removable retractor.

PMR Packing Gland
2-inch Male NPT with Retractor, 600 lb pressure rating.

PMR-LE Packing Gland
2-inch Male NPT with Retractor, 600 lb pressure rating. (for LE)

PF Packing Gland
2-inch 150 lb Flange, 50 psig (3.5 barg) maximum process pressure without removable retractor

PFR Packing Gland
2-inch 150 lb Flange with Retractor

PFR-LE Packing Gland 2-inch 150 lb Flange with Retractor
For use with Extended probe length (see LE option)

PG Packing Gland
2-inch 300 lb Flange, 50 psig (3.5 barg) maximum process pressure without removable retractor.

PGR Packing Gland
2-inch 300 lb Flange with Retractor

PGR-LE Packing Gland 2-inch 300 lb Flange with Retractor
For use with Extended probe length (see LE option)

PH Packing Gland
2-inch 600 lb Flange, 50 psig (3.5 barg) maximum process pressure without removable retractor

PHR Packing Gland
2-inch 600 lb Flange with Retractor

PHR-LE Packing Gland 2-inch 600 lb Flange with Retractor
For use with Extended probe length (see LE option)

CFD Compression Fitting
DN50/PN16 Flange.

CGD Compression Fitting
DN50/PN40 Flange.

CHD Compression Fitting
DN50/PN64 Flange.

PFD Packing Gland
DN50/PN16 Flange, 50 psig (3.5 barg) maximum process pressure

PFDR Packing Gland
DN50/PN16 Flange, with retractor.

PFDR-LE Packing Gland
DN50/PN16 Flange, with retractor. For use with Extended probe length (see LE option)

PGD Packing Gland
DN50/PN40 Flange, 50 psig (3.5 barg) maximum process pressure

PGDR Packing Gland
DN50/PN40 Flange, with retractor.

PGDR-LE Packing Gland
DN50/PN40 Flange, with retractor. For use with Extended probe length (see LE option)

PHD Packing Gland
DN50/PN64 Flange, 50 psig (3.5 barg) maximum process pressure

PHDR Packing Gland
DN50/PN64 Flange, with retractor.

PHDR-LE Packing Gland
DN50/PN64 Flange, with retractor. For use with Extended probe length (see LE option)

Appendix B Flow Meter Calculations

In-Line Flow Meter Calculations

Volume Flow Rate

$$Q_V = \frac{f}{K}$$

Mass Flow Rate

$$Q_M = Q_V \rho$$

Flowing Velocity

$$V_f = \frac{Q_V}{A}$$

Where:

A = Cross sectional area of the pipe (ft^2)
f = Vortex shedding frequency (pulses / sec)
K = Meter factor corrected for thermal expansion (pulses / ft^3)
Q_M = Mass flow rate (lbm / sec)
Q_v = Volume flow rate (ft^3 / sec)
V_f = Flowing velocity (ft / sec)
ρ = Density (lbm / ft^3)

Insertion Flow Meter Calculations

Flowing Velocity

$$V_f = \frac{f}{K_c}$$

Volume Flow Rate

$$Q_V = V_f A$$

Mass Flow Rate

$$Q_M = V_f A \rho$$

Where:
A = Cross sectional area of the pipe (ft^2)
f = Vortex shedding frequency (pulses / sec)
K_c = Meter factor corrected for Reynolds Number (pulses / ft)
Q_v = Volume flow rate (ft^3 / sec)
Q_M = Mass flow rate (lbm / sec)
V_f = Flowing velocity (ft / sec)
ρ = Density (lbm / ft^3)

Fluid Calculations

Calculations for Steam T & P

When “Steam T & P” is selected in the “Real Gas” selection of the Fluid Menu, the calculations are based on the equations below.

Density

The density of steam is calculated from the formula given by Keenan and Keys. The given equation is for the volume of the steam.

$$v = \frac{4.555.04 \bullet T}{p} + B$$

$$B = B_0 + B_0{}^2 g_1(\tau)\tau \cdot p + B_0{}^4 g_2(\tau)\tau^3 \cdot p^3 - B_0{}^{13} g_3(\tau)\tau^{12} \cdot p^{12}$$

$$B_0 = 1.89 - 2641.62 \cdot \tau \cdot 10^{80870\tau^2}$$

$$g_1(\tau) = 82.546 \cdot \tau \quad -1.6246 \cdot 10^5 \cdot \tau^2$$

$$g_2(\tau) = 0.21828 - 1.2697 \cdot 10^5 \cdot \tau^2$$

$$g_3(\tau) = 3.635 \cdot 10^{-4} - 6.768 \cdot 10^{64} \cdot \tau^{24}$$

Where tau is 1/ temperature in Kelvin.

The density can be found from 1/(v/ standard density of water).

Viscosity

The viscosity is based on an equation given by Keenan and Keys.

$$\eta(poise) = \frac{1.501 \cdot 10^{-5}\sqrt{T}}{1 + 446.8/T}$$

Where T is the temperature in Kelvin

Calculations for Gas (“Real Gas” and “Other Gas”)

Use this formula to determine the settings for “Real Gas; Gas” selections and “Other Gas” selections entered in the Fluid Menu. The calculations for gas were taken from Richard W. Miller, *Flow Measurement Engineering Handbook (Third Edition, 1996)*.

Density

The density for real gases is calculated from the equation:

$$\rho = \frac{GM_{w,Air}\, p_f}{Z_f R_0 T_f}$$

Where G is the specific gravity, M_W is the molecular weight of air, p_f is the flowing pressure, Z is flowing compressibility, Ro is the universal gas constant, and T is the flowing temperature.

The specific gravity, and Ro are known and are stored in a table used by the Vortex meter.

The hard coefficient to find is the compressibility, Z. Z is found using the Redlich-Kwong Equation (Miller page 2-18).

The Redlich-Kwong Equation uses the reduced temperature and pressure to calculate the compressibility factor. The equations are non linear and an iterative solution is used. The Vortex program uses Newton’s Method on the Redlich-Kwong equations to iteratively find the compressibility factor. The critical temperature and pressure used in the Redlich-Kwong equation are stored in the fluid data table with the other coefficients.

Viscosity

The viscosity for real gases is calculated using the exponential equation for two known viscosities. The equation is:

$$\mu_{cP} = aT_K^n$$

Where a and n are found from two known viscosities at two temperatures.

$$n = \frac{\ln[(\mu_{cP})_2 / (\mu_{cP})_1]}{\ln(T_{K2} / T_{K1})}$$

and

$$a = \frac{(\mu_{cP})_1}{T_{K1}^n}$$

Calculations for Liquid

Use this formula to determine the settings for “Goyal-Dorais” selections and “Other Liquid” selections entered in the Fluid Menu. The liquid calculations were taken from Richard W. Miller, *Flow Measurement Engineering Handbook (Third Edition, 1996)*.

Density

The liquid density is found using the Goyal-Doraiswamy Equation. Goyal-Doraiswamy uses the critical compressibility, critical pressure and critical temperature, along with the molecular weight to find the density. The equation for specific gravity is:

$$G_F = \frac{p_c Mw}{T_c}\left(\frac{0.008}{Z_c^{0.773}} - 0.01102\frac{T_f}{T_C}\right)$$

The specific gravity can then be converted into density.

Viscosity

The liquid viscosity is found by Andrade's equation. This uses two viscosities at different temperatures to extrapolate the viscosity.

Andrade's equation:

$$\mu = A_L \exp\frac{B_L}{T_{\deg R}}$$

To find A and B

$$B_L = \frac{T_{\deg R1} T_{\deg R2} \ln(\mu_1 / \mu_2)}{T_{\deg R2} - T_{\deg R1}}$$

$$A_L = \frac{\mu_1}{\exp(B_L / T_{\deg R1})}$$

The temperatures are all in degrees Rankin. Do not believe the subscript R means they are reduced temperatures.

Appendix C Glossary

A B C D

A	Cross sectional area.
ACFM	Actual Cubic Feet Per Minute (volumetric flow rate).
ASME	American Society of Mechanical Engineers.
Bluff Body	A non-streamlined body placed into a flow stream to create vortices. Also called a Shedder Bar.
BTU	British Thermal Unit, an energy measurement.
Cenelec	European Electrical Code.
Compressibility Factor	A factor used to correct for the non-ideal changes in a fluid's density due to changes in temperature and/or pressure.
CSA	Canadian Standards Association.
d	Width of a bluff body or shedder bar.
D	Diameter of a flow channel.

E F G H

f	Frequency of vortices generated in a vortex flow meter, usually in Hz.
Flow Channel	A pipe, duct, stack, or channel containing flowing fluid.
Flow Profile	A map of the fluid velocity vector (usually non-uniform) in a cross-sectional plane of a flow channel (usually along a diameter).
FM	Factory Mutual.
Ft	Foot, 12 inches, a measure of length.
Ft^2	Square feet, measure of area.
Ft^3	Cubic feet, measure of volume.
GPM	Gallons Per Minute.
Hz	Hertz, cycles per second.

I J K L

In-Line Flow Meter	A flow meter which includes a short section of piping which is put in-line with the user's piping.
Insertion Flow Meter	A flow meter which is inserted into a hole in the user's pipeline.
Joule	A unit of energy equal to one watt for one second. Also equal to a Newton-meter.
LCD	Liquid crystal display.

M N O P

$\dot{m}$	Mass flow rate.
mA	Milli-amp, one thousandth of an ampere of current.
μ	Viscosity, a measure of a fluid's resistance to shear stress. Honey has high viscosity, alcohol has low viscosity.
nm3/hr	Normal cubic meters per hour (flow rate converted to normal conditions, as shipped 101 kPa and 0° C). User definable.
ΔP	Permanent pressure loss.
P	Line pressure (psia or bar absolute).
ρ_{act}	The density of a fluid at the <u>actual</u> temperature and pressure operating conditions.
ρ_{std}	The density of a fluid at <u>standard</u> conditions (usually 14.7 psia and 20° C).
Permanent Pressure Loss	Unrecoverable drop in pressure.
Piezoelectric Crystal	A material which generates an electrical charge when the material is put under stress.
PRTD	An resistance temperature detector (RTD) with platinum as its element. Used because of high stability.
psia	Pounds per square inch absolute (equals psig + atmospheric pressure). Atmospheric pressure is typically 14.696 psi at sea level.
psig	Pounds per square inch gauge.

P_V	Liquid vapor pressure at flowing conditions (psia or bar absolute).

Q R S T

Q	Flow rate, usually volumetric.
Rangeability	Highest measurable flow rate divided by the lowest measurable flow rate.
Reynolds Number or Re	A dimensionless number equal to the density of a fluid times the velocity of the fluid times the diameter of the fluid channel, divided by the fluid viscosity (i.e., $Re = \rho VD/\mu$). The Reynolds number is an important number for vortex flow meters because it is used to determine the minimum measurable flow rate. It is the ratio of the inertial forces to the viscous forces in a flowing fluid.
RTD	Resistance temperature detector, a sensor whose resistance increases as the temperature rises.
scfm	Standard cubic feet per minute (flow rate converted to standard conditions, as shipped 14.696 psia and 59° F). User definable.
Shedder Bar	A non-streamlined body placed into a flow stream to create vortices. Also called a Bluff Body.
Strouhal Number or St	A dimensionless number equal to the frequency of vortices created by a bluff body times the width of the bluff body divided by the velocity of the flowing fluid (i.e., $St = fd/V$). This is an important number for vortex flow meters because it relates the vortex frequency to the fluid velocity.
Totalizer	An electronic counter which records the total accumulated flow over a certain range of time.
Traverse	The act of moving a measuring point across the width of a flow channel.

U V W X Y Z

Uncertainty	The closeness of agreement between the result of a measurement and the true value of the measurement.
V	Velocity or voltage.
VAC	Volts, alternating current.
VDC	Volts, direct current.
VORTEX	An eddy of fluid.