FastFlo™ 620S
Insertion Mass Flow Meter

Instruction Manual

Part Number IM-62S
Revision P, January 2026

GLOBAL SUPPORT LOCATIONS: WE ARE HERE TO HELP!

CORPORATE HEADQUARTERS
20 Ryan Ranch Road, Suite 109
Monterey, CA 93940
Phone (831) 373-0200 (800) 866-0200
www.sierrainstruments.com

EMEA HEADQUARTERS
sales@sierrainstruments.nl

ASIA HEADQUARTERS
Second Floor Building 5, Senpu Industrial Park
25 Hangdu Road Hangtou Town
Pu Dong New District, Shanghai, P.R. China
Postal Code 201316
Phone: + 8621 5879 8521

© COPYRIGHT SIERRA INSTRUMENTS 2026
No part of this publication may be copied or distributed, transmitted, transcribed, stored in a retrieval system, or translated into any human or computer language, in any form or by any means, electronic, mechanical, manual, or otherwise, or disclosed to third parties without the express written permission of Sierra Instruments. The information contained in this manual is subject to change without notice.

TRADEMARKS

FastFlo™ and Smart Interface™ Series is a Registered Trademark of Sierra Instruments, Inc. Other product and company names listed in this manual are trademarks or trade names of their respective manufacturers.

Table of Contents

Chapter 1 Introduction

FastFlo™ 620S Mass Flow Meters 1-1
Using this Manual 1-1
Note and Safety Information 1-2
Receipt of System Components 1-2
Technical Assistance 1-2
The FastFlo 620S Flow Sensing Principle 1-3
FastFlo™ Electronics Features 1-4
Enclosure Options 1-5
Smart Interface Software 1-5

Chapter 2 Installation and Wiring

Installation Overview 2-1
Site Selection 2-1
Unobstructed Flow Requirements 2-2
Installation 2-3
Wiring Connections 2-4
Input Power Wiring 2-4
Output Signal Wiring 2-5
Alarm Output Wiring 2-7
Remote Sensor Probe Wiring 2-8
Range Selection Wiring 2-9

Chapter 3 Operating Instructions

Using the FastFlo™ Electronics Basic Features 3-1
Using the Single-Digit LED for Programming 3-2
Using the LCD Display for Programming 3-3
Entering Alarm Parameters 3-4
K-factor Adjustment 3-5
User Full Scale Adjustment 3-6
Time Response Delay Adjustment 3-7
Totalizer Reset 3-7
Using the FastFlo™ Electronics Advanced Features 3-8
Voltage Zero Adjustment 3-8
Voltage Span Adjustment 3-8
Current Zero Adjustment 3-9
Current Span Adjustment 3-9
Instrument Validation 3-10
Electronics Validation Procedure 3-11
Sensor Validation Procedure 3-12

Chapter 4 Troubleshooting and Repair

Troubleshooting the Flow Meter 4-1
Obtaining a Return Material Authorization 4-3

Appendix A Product Specifications
Appendix B Warranty Policy

List of Figures

1-1. FastFlo 620S™ Sensor Assembly 1-3
2-1. Recommended Pipe Length Requirements.....2-2
2-2. Wiring Access.....2-4
2-3. Input Power Connections.....2-4
2-4. Output Signal Wiring.....2-5
2-5. Isolated 4-20 mA Current Loop Connections.....2-6
2-6. Non-isolated 4-20 mA Current Loop Connections.....2-6
2-7. Isolated Alarm Output Connections.....2-7
2-8. Non-isolated Alarm Output Connections.....2-7
2-9. Remote Electronics to Sensor Connections.....2-8
2-10. Sensor J Box to Remote Enclosure Connections 2-8
2-11. Range Selection Wiring 2-9
3-1. Display/Keypad Commands 3-1
3-2. Electronics Validation Component Locations 3-10
3-3. Sensor Validation Component Locations 3-12

List of Tables

3-1. Electronics Validation Results 3-12
3-2. Sensor Validation Results.....3-13

Warnings and Cautions

Warning! All wiring procedures must be performed with the power Off.

Warning! To avoid potential electric shock, follow National Electric Code safety practices or your local regulations when wiring this unit to a power source and to peripheral devices. Failure to do so could result in injury or death.

Warning! Do not power the flow meter with the sensor jumper wires disconnected. This could cause over-heating of the sensors and/or damage to the electronics.

Warning! Always remove main power before disassembling any part of the mass flow meter.

Caution! Before making adjustments to the Smart electronics device, verify the flow meter is not actively monitoring or reporting to any master control system. Adjustments to the electronics will cause direct changes to flow control settings.

Caution! All flow meter connections and fittings for pipe tapping must have the same or higher pressure rating as the main pipeline.

Caution! To avoid serious injury, DO NOT loosen a compression fitting under pressure.

Catuion! Before attempting any flow meter repair, verify that the line is de-pressurized.

Caution! Printed circuit boards are sensitive to electrostatic discharge. To avoid damaging the board, follow these precautions to minimize the risk of damage:

- before handling the assembly, discharge your body by touching a grounded, metal object
- handle all cards by their edges unless otherwise required
- when possible, use grounded electrostatic discharge wrist straps when handling sensitive components

Chapter 1 Introduction

FastFlo 620S Mass Flow Meters

Sierra's FastFlo™ 620S provides a reliable solution for natural gas, methane, or propane gas flow measurement applications. Low-flow sensitivity, fast response and outstanding rangeability have made this model the instrument of choice for many critical gas flow applications.

The FastFlo microprocessor-based transmitter integrates the functions of flow-range adjustment, meter validation and diagnostics in a probe-mounted or remote NEMA 4X (IP65) housing. Mass flow rate and totalized flow, as well as other configuration variables can be displayed on the meter's optional 2 x 12 backlit LCD panel. The meter provides an optical/galvanic isolated flow output, two alarm outputs and one contact input for range or gas selection. The programmable transmitter is easily configured via RS-232 and Sierra's Smart Interface software or through three push buttons built into the device.

Depending on the probe length, the FastFlo 620S is suitable for pipes or ducts from 1 inch up to 24 inches (DN25 up to DN600) . The FastFlo's simple installation combines with an easy-to-use interface that provides quick set up, long term reliability and accurate mass flow measurement over a wide range of conditions. Modbus communication is standard.

Using This Manual

This manual provides the information you need to install and operate the FastFlo 620S The four chapters of this manual cover these areas:

- Chapter 1 includes the introduction and product description
- Chapter 2 provides installation and wiring instructions
- Chapter 3 describes system operation and programming
- Chapter 4 covers troubleshooting and repair

The product specifications and dimensional drawings are found in Appendix A. Dimensional drawings of the Packing Gland for the Hot Tap are in Appendix B. Modbus details are in Appendix C.

Note and Safety Information

We use note, caution and warning statements throughout this book to draw your attention to important information.

Warning!
This statement appears with information that is important to protect people and equipment from damage. Pay very close attention to all warnings that apply to your application.

Caution!
This statement appears with information that is important for protecting your equipment and performance. Read and follow all cautions that apply to your application.

Note
This statement appears with a short message to alert you to an important detail.

Receipt of System Components

When receiving a Sierra mass flow meter, carefully check the outside packing carton for damage incurred in shipment. If the carton is damaged, notify the local carrier and submit a report to the factory or distributor. Remove the packing slip and check that all ordered components are present. Make sure any spare parts or accessories are not discarded with the packing material. Do not return any equipment to the factory without a Return Material Authorization (RMA, see Chapter 4).

Technical Assistance

If you encounter a problem with your flow meter, review the configuration information for each step of the installation, operation and setup procedures. Verify that your settings and adjustments are consistent with factory recommendations. Refer to Chapter 4, Troubleshooting, for specific information and recommendations.

If the problem persists after following the troubleshooting procedures outlined in Chapter 4, contact Sierra Instruments by fax or by E-mail (service@sierrainstruments.com). For phone support you may call (800) 866-0200 or (831) 373-0200 between 8:00 a.m.
and 5:00 p.m. PST. In Europe contact Sierra Instruments b.v. at +31 20 6145810. When contacting Technical Support, make sure to include this information:

- the flow range, serial number and Sierra order number and model number (all marked on the meter nameplate)
- if possible, the firmware version (visible at start up on the meter display)
- the problem you are encountering and any corrective action taken
- application information (gas, pressure, temperature, piping configuration)

The FastFlo 620S Flow Sensing Principle

Sierra's unique FastFlo 620S sensor probe is responsible for the unsurpassed accuracy and reliability of Sierra mass flow meters. The sensor consists of two sensing elements–a velocity sensor and a temperature sensor which automatically corrects for changes in gas temperature. When power is applied to the flow meter, the transducer electronics heats the velocity sensor to a constant temperature differential above the gas temperature and measures the cooling effect of the gas flow. The electrical power required to maintain a constant temperature differential is directly proportional to the gas mass flow rate. The meter electronics measure this power and convert it into a linear 0-5 VDC (0-10 VDC optional) and 4-20 mA output signal.

The FastFlo sensors are reference-grade platinum resistance temperature detectors (RTD) encapsulated in glass. The platinum RTD wire is wound on a rugged ceramic mandrel for strength and stability. The sensor is located at the tip of a 0.375 inch (3/8") diameter, 304 stainless steel probe which is inserted in the gas stream. The 620S electronics are packaged in a weather-proof NEMA 4X (IP65) enclosure mounted either directly on the sensing probe or remotely up to 100 feet (60 meters) away.

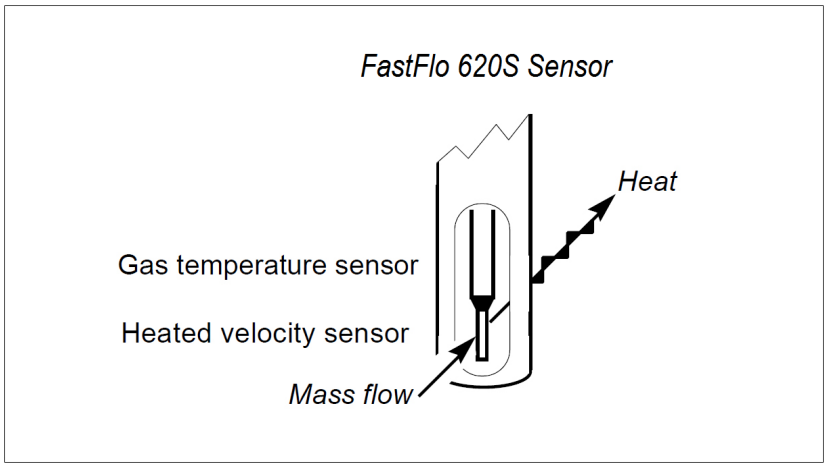

Figure 1-1. FastFlo 620S Sensor Assembly

FastFlo Electronics Features

Instrument Validation

Two simple tests offer full “field-validation” of your FastFlo mass flow meter. The first test checks the system electronics, linearization and microprocessor functionality. This is performed by injecting a known input value and confirming that the flow meter outputs the expected value. The second test verifies that the instrument’s primary sensing elements have not drifted or shifted from their original calibration. This is accomplished by measuring the resistance of the velocity and temperature sensors and comparing the results to the NIST-traceable calibration data provided with the flow meter. Together, these tests confirm that your meter is working correctly and the calibration variables did not drift, shift or change values.

Dual Range or Dual Gas Calibration (Optional)

Select one of two factory calibrated flow ranges using a simple external customer-supplied single contact closure.

User Full Scale Flow Rate

Field-configure from 50% to 100% of the factory full scale setting (factory full scale is normally set to 125% of the user-specified maximum flow rate). This adjustment can be made for each flow range.

Alarms

Program high and low or window alarm limits independently for each flow range. The solid state contacts are isolated with one common.

K-Factor Correction

Change the calibration correction factor to compensate for flow profile disturbances or specific application conditions. The K-factor is a multiplication factor applied to the linearized flow signal. You may set the K-factor individually for each flow range.

Dual Output Signals

FastFlo offer two separate linear output signals proportional to flow, 0-5 VDC (0-10 VDC optional) and 4-20 mA. The 4-20 mA output can be field-configured as an active loop powered by the flow meter or an optically isolated passive loop requiring an external power supply.

Totalizer

With the optional LCD display, actual mass flow appears on line 1 and the totalized flow on line 2 both in the user-specified engineering units. The totalizer counts only the selected range and when ranges are switched, the value of the non-selected range is stored in memory. You may reset the totalizer using the 3 function buttons mounted on the PCA or by using a hand-held magnet.

NOTE: The totalizer will display a real-time value, but the EPROM requires 6 minutes to store it. Always wait 6 minutes to remove power or this most recent flow accumulation may be lost.

Zero and Span Outputs

Validate and adjust the settings to ensure output circuits are correct.

Time Response Delay

Select from a low response for faster tracking to a high response for a smoother output.

Enclosure Options

Flow meter electronics are available mounted directly to the flow body, or remotely mounted up to 100 feet (60 meters) away. The electronics housing may be used indoors or outdoors.

Display options include a 2 x 12 character LCD display of mass flow rate including totalized mass, or a single-digit LED located on the device printed circuit board. Local operation and reconfiguration is accomplished using the three push buttons operated via finger touch. FastFlo electronics include nonvolatile memory that stores all configuration information. The memory allows the flow meter to function immediately upon power up, or after an interruption in power.

Smart Interface™ Software

Sierra's Smart Interface Windows™-based software is available for connecting your PC directly to the FastFlo™. An RS-232 serial cable along with CD-ROM containing the program and system files are available from the factory. See the Smart Interface User Guide included with the software for operating instructions.

Chapter 2 Installation

Installation Overview

The FastFlo 620S flow meter is factory calibrated to the specific pipe size shown on the meter's Certificate of Calibration. The factory calibration eliminates the task of calculating the average flow across the pipe to determine the correct insertion depth. Simply insert the flow meter sensor to the centerline position of the pipe. (If the pipe size differs from the meter's calibrated size, return the meter to the factory for re-calibration.)

When selecting an installation site, make sure that:

1. Line pressure and temperature will not exceed the flow meter rating. Temperature should not vary more than 120°F (50°C) from the calibration temperature. Line pressure should not vary more than 50 psi (3.4 bar) around the calibrated pressure.

2. The location meets the required minimum number of pipe diameters upstream and downstream of the sensor head (see Figure 2-1).

3. Safe and convenient access with adequate clearance. Also, verify the meter is located where the gas is clean and dry and the meter is calibrated for the gas to be measured.

4. For remote installations, verify the supplied cable length is sufficient to connect the flow meter sensor to the remote electronics. (Do not extend or shorten the supplied cable between the probe and the electronics.)

Also, before installation check your flow system for anomalies such as:

- leaks
- valves or restrictions in the flow path that could create disturbances in the flow profile that might cause unexpected flow rate indications
- heaters that might cause rapid excursions in the measured temperature

Unobstructed Flow Requirements

Select an installation site that will minimize possible distortion in the flow profile. Valves, elbows, control valves and other piping components may cause flow disturbances. Check your specific piping condition against the examples shown below. In order to achieve accurate and repeatable performance install the flow meter using the recommended number of straight run pipe diameters upstream and downstream of the sensor.

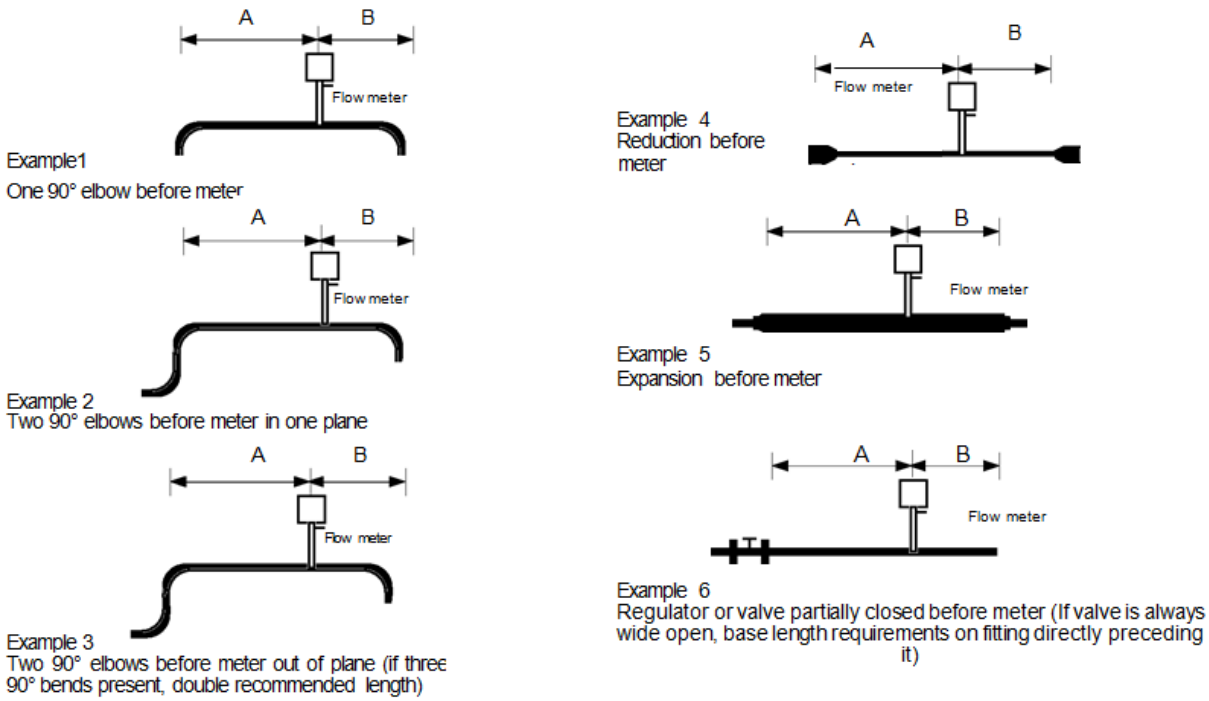

Example	A – Upstream(1) Requirements	B – Downstream(2) Requirements
1	15 D	5 D
2	20 D	5 D
3	40 D	10 D
4	15 D	5 D
5	30 D	10 D
6	40 D	5 D

(1) Number of diameters (D) of straight pipe required between upstream disturbance and the flow meter.
(2) Number of diameters (D) of straight pipe required downstream of the flow meter.

Figure 2-1. Recommended Pipe Length Requirements for Installation

Installation

Use the following data as a guide to prepare the pipe for flow meter insertion. Refer to a standard code for all pipe tapping operations. The following instructions are general in nature and intended for guideline purposes only.

1. Turn off the flow of process gas. Verify that the line is not pressurized.

2. Confirm that the installation site meets the minimum upstream and downstream pipe diameter requirements. See Figure 2-1.

3. Use a cutting torch or sharp cutting tool to tap into the pipe. The pipe opening must be at least .375 inches in diameter. (Do not attempt to insert the sensor probe through a smaller hole.)

4. Remove all burrs from the tap. Rough edges may cause flow profile distortions that could affect flow meter accuracy. Also, obstructions could damage the sensor assembly when inserting into the pipe.

Caution!
All flow meter connections and fittings must have the same or higher pressure rating as the main pipeline.

5. Mount the 3/8 inch compression fitting on the pipe. Make sure this connection is within ± 5° perpendicular to the pipe centerline.

6. When installed, cap the fitting. Run a static pressure check on the connection. If pressure loss or leaks are detected, repair the connection and re-test.

7. Insert the sensor probe through the compression fitting into the pipe. The correct insertion depth places the centerline of the sensor access hole in the probe at the pipe centerline. **NOTE: Make sure on smaller pipes that the probe does not end up closer than ¼-inch from the far pipe wall or it may be damaged.**

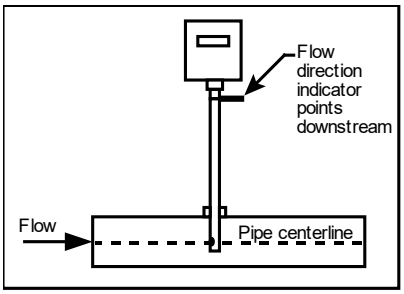

8. Align the sensor head using the flow direction indicator. Adjust the indicator parallel to the pipe and pointing downstream in the direction of flow.

Caution!
To avoid serious injury, DO NOT loosen the compression fitting under pressure.

9. Tighten the compression fitting to lock the flow meter in position. When the compression fitting is tightened, the position is permanent (unless using Teflon ferrules).

10. Units may be hot-tapped. A suitable packing gland is required (See Appendix B).

Wiring Connections

All wiring procedures must be performed with the power Off.

All power and signal wire sizes must be 26 to 16 AWG with the wire stripped 1/4 inch (6 mm). The NEMA 4X enclosure contains an integral wiring compartment with one dual strip terminal block for power and signal connections and one dual strip terminal block for sensor connections. The enclosure has one 1/2 inch female NPT conduit entry. The terminal designations are labeled inside the enclosure cover.

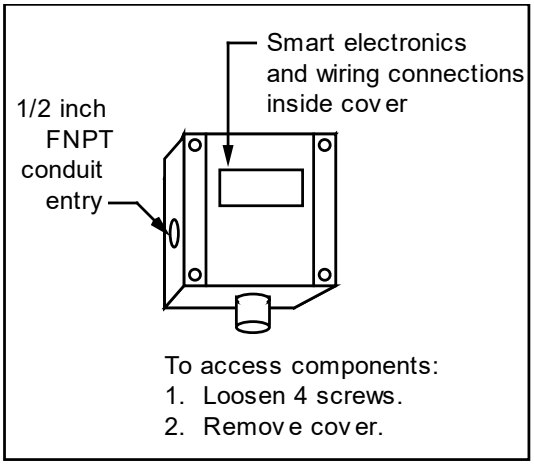

Figure 2-2. Wiring Access

Input Power Wiring

Warning!
To avoid potential electric shock, follow National Electric Code safety practices or your local code when wiring this unit to a power source and to peripheral devices. Failure to do so could result in injury or death.

Depending on the flow meter configuration, connect 18 to 30 VDC (625 mA load, maximum) as shown below. Confirm power configuration **before** applying power. See the flow meter nameplate for input power rating.

Note!
The FastFlo input power is a Sierra exclusive at 18 to 30 VDC.

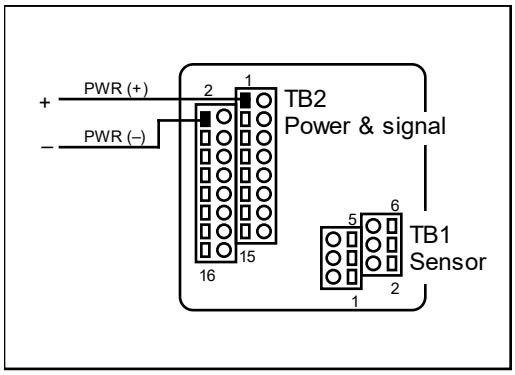

Figure 2-3. Input Power Connections

Output Signal Wiring

All flow meters are equipped with either a calibrated 0-5 VDC (0-10 VDC optional) or a calibrated 4-20 mA output signal. These linear output signals represent 0-100% of the flow meter user full scale.

DC Output Wiring

The 0-5 VDC (0-10 VDC optional) signal can drive a load of 1000 Ohms. The optional 0-10 VDC output signal is not available for power sources below 15 VDC. Connect as shown below.

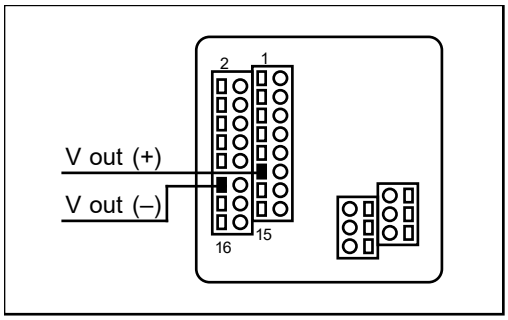

Figure 2-4. VDC Output Wiring Connections

4-20 mA Output Wiring

The 4-20 mA current loop output can be self-powered by the flow meter's power supply (non-isolated) or externally powered (isolated) requiring a separate 18 to 30 VDC power supply.

R_{load} is the total resistance in the loop, including the wiring resistance. To calculate R_{max}, the maximum R_{load} for the loop, use the maximum loop current, 20 mA. The voltage drop in the loop due to resistance is 20 mA times R_{load} and this drop is subtracted from the input voltage. Thus:

$$R_{max} \text{ the maximum load resistance} = 50 * (V_{supply} - 7.5V)$$

To use an external power supply for an isolated 4-20 mA output, connect as shown in Figure 2-5. For an internally powered non-isolated 4-20 mA output, connect as shown in Figure 2-6.

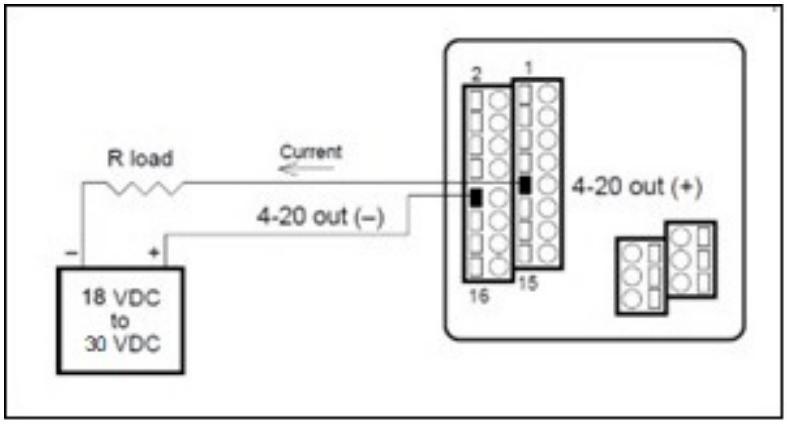

Figure 2-5. Isolated 4-20 mA Current Loop Connections

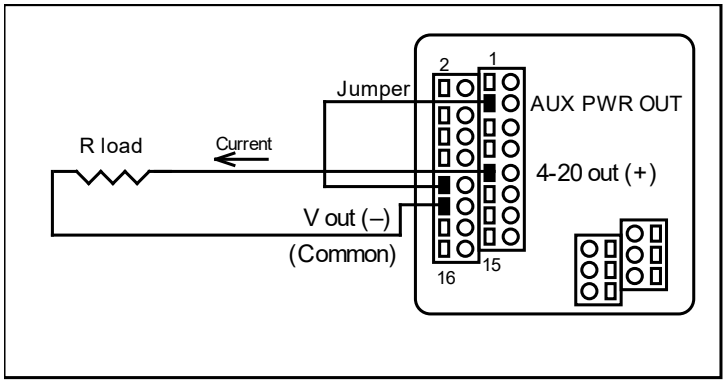

Figure 2-6. Non-isolated 4-20 mA Current Loop Connections

Alarm Output Wiring

Two alarm outputs (Low Alarm and High Alarm) are included on the flow meter terminal block. The alarm outputs relays are normally-open single-pole relays with one common connection.

There are two connection options for alarm outputs–the first with a separate power supply (isolated) and the second using the flow meter power supply (non-isolated). Use a separate power supply if a specific voltage is needed for the alarm output. Use the second (non-isolated) configuration if the voltage at the flow meter's power supply is an acceptable driver voltage for the load connected. (Take into account that the current used by your alarm loads have to come from the flow meter's power supply.) In either case, the voltage of the alarm output is the same as the voltage supplied to the circuit.

To use an external power supply for an isolated alarm output, connect as shown in Figure 2-7. To use the internally powered, non-isolated alarm output connect as shown in Figure 2-8. For a window alarm connect both outputs together.

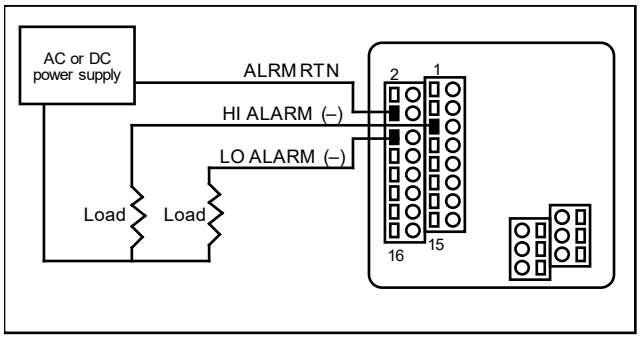

Figure 2-7. Isolated Alarm Output Connections

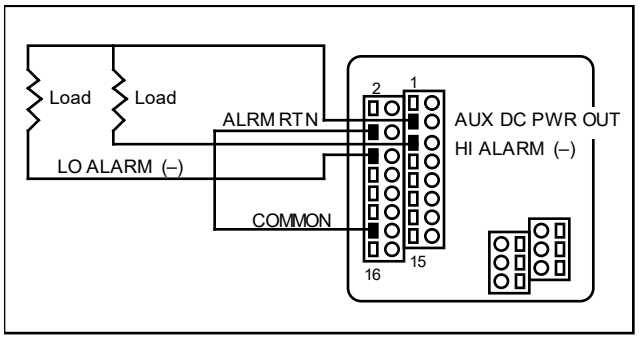

Figure 2-8. Non-isolated Alarm Output Connections

Caution!
Changing the length of cables or interchanging sensors or sensor wiring will affect the accuracy of the flow meter. You cannot add or subtract wire length without returning the meter to the factory for re-calibration.

Remote Sensor Probe Wiring

Use only factory supplied cables when connecting the sensor probe to a remotely mounted flow meter enclosure. The electronics, sensors and interconnecting cables supplied by Sierra Instruments are calibrated as a complete precision mass flow circuit.

To connect the sensor probe to a remotely mounted electronics enclosure, see Figure 2-9. To make wiring connections from a sensor probe junction box to a remotely mounted enclosure, see Figure 2-10.

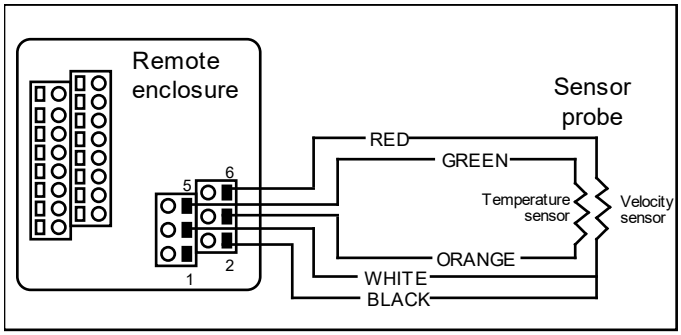

Figure 2-9. Remote Electronics Enclosure to Sensor Connections

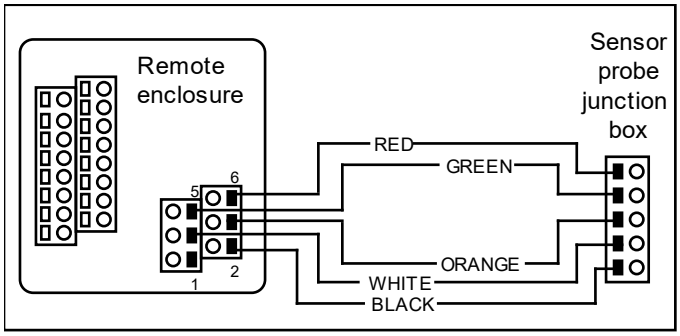

Figure 2-10. Sensor Junction Box to Remote Enclosure Connections

Range Selection Wiring

If your meter is equipped with an optional second range calibration, connect a contact switch as shown below. When the switch is closed the device changes to Range 2. Open the switch to return to Range 1.

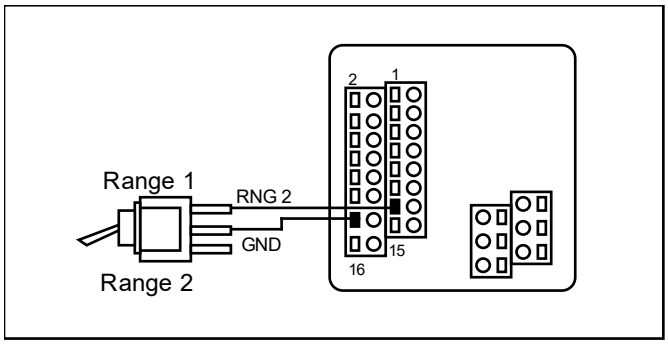

Figure 2-11. Range Selection Wiring

Chapter 3 Operation

Using the FastFlo Electronics Basic Features

Caution!
Before making any adjustment to the FastFlo electronics device, verify the flow meter is not actively monitoring or reporting to any master control system. Any adjustment to the electronics will cause direct changes to flow control settings.

Three push buttons allow selection and adjustment of the basic user functions. Use the push buttons to enter:

- alarm parameters
- change the user full scale
- adjust the K-factor
- adjust the time response speed
- reset the totalizer

You may view parameters using the optional LCD front panel display or by selecting functions on the single-digit LED and viewing the meter's 0-5 VDC output with a digital voltmeter (DVM).

Before making changes or adjustments:

For meters with the optional LCD display, remove the enclosure cover to access the FastFlo electronics. Press the FUNCTION key to view and record the factory settings. When pressing FUNCTION the optional LCD display prompts for a password, press FUNCTION again to skip the password and review the current settings. (To make changes, at the password prompt press the UP arrow until 11 is displayed, press FUNCTION to continue.)

For flow meters without the display, remove the enclosure cover to access the FastFlo electronics. Connect the DVM as described on the following pages and record the factory-set parameters.

After 12 seconds of non-activity during programming, the meter returns to the Run Mode with any new settings immediately in effect. For units without a LCD front panel display: if the unit "times-out" when entering a new parameter, press the FUNCTION button *only* to resume adjustments.

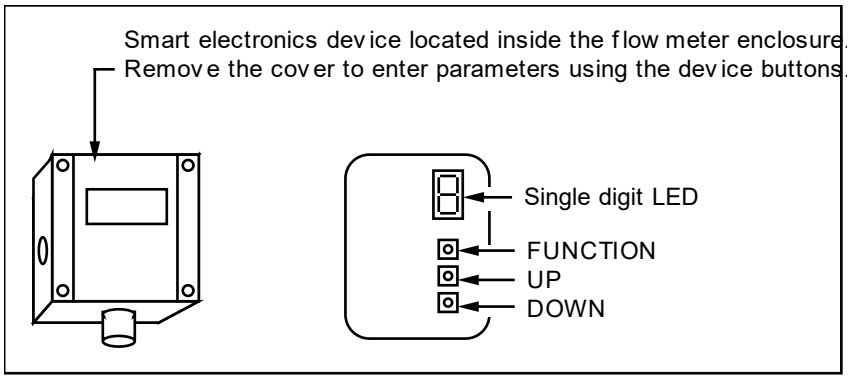

Figure 3-1. Display/Keypad Commands

Flow Meter Start Up

When applying power to a flow meter equipped with the optional LCD display you will see the product name, the software version, unit serial number, the range number, the user full scale (UFS), the current flow rate and the totalized flow. Any active alarm will flash on the screen every few seconds. For meters without the optional display, when power is applied the on-board single-digit LED flashes the revision number of the software in a series of 3 digits, followed by the range number; the range number continues to flash every 3 seconds thereafter.

Using the Single-Digit LED for Programming

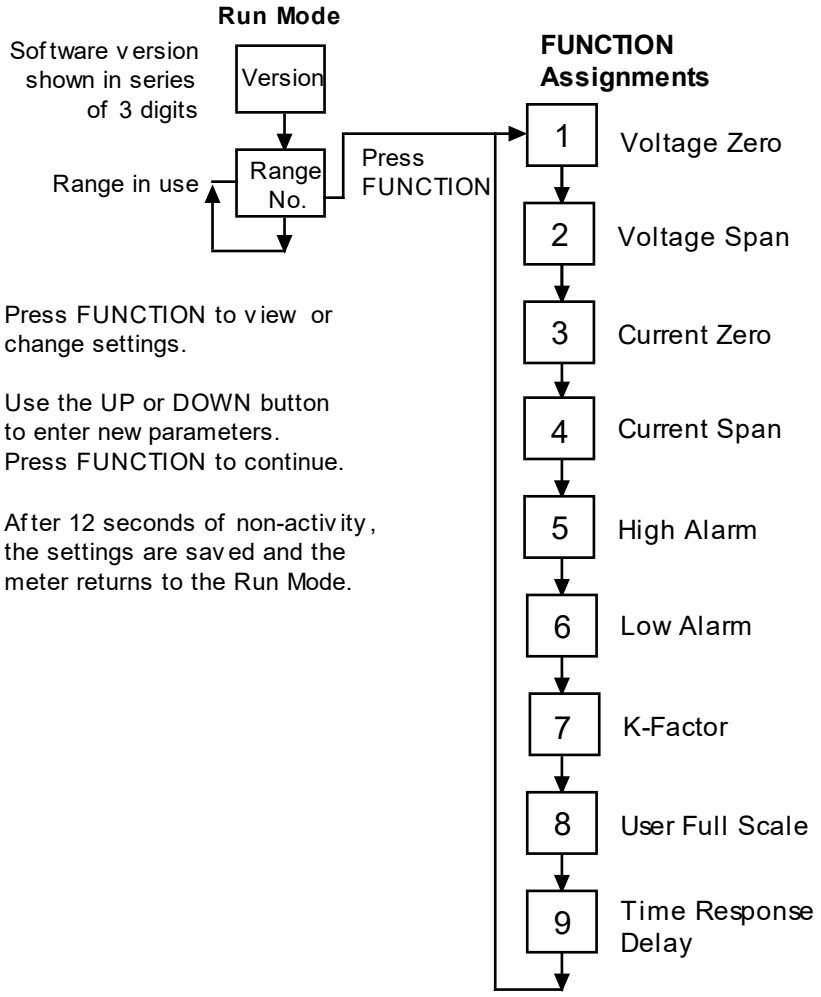

Using the LCD Display for Programming

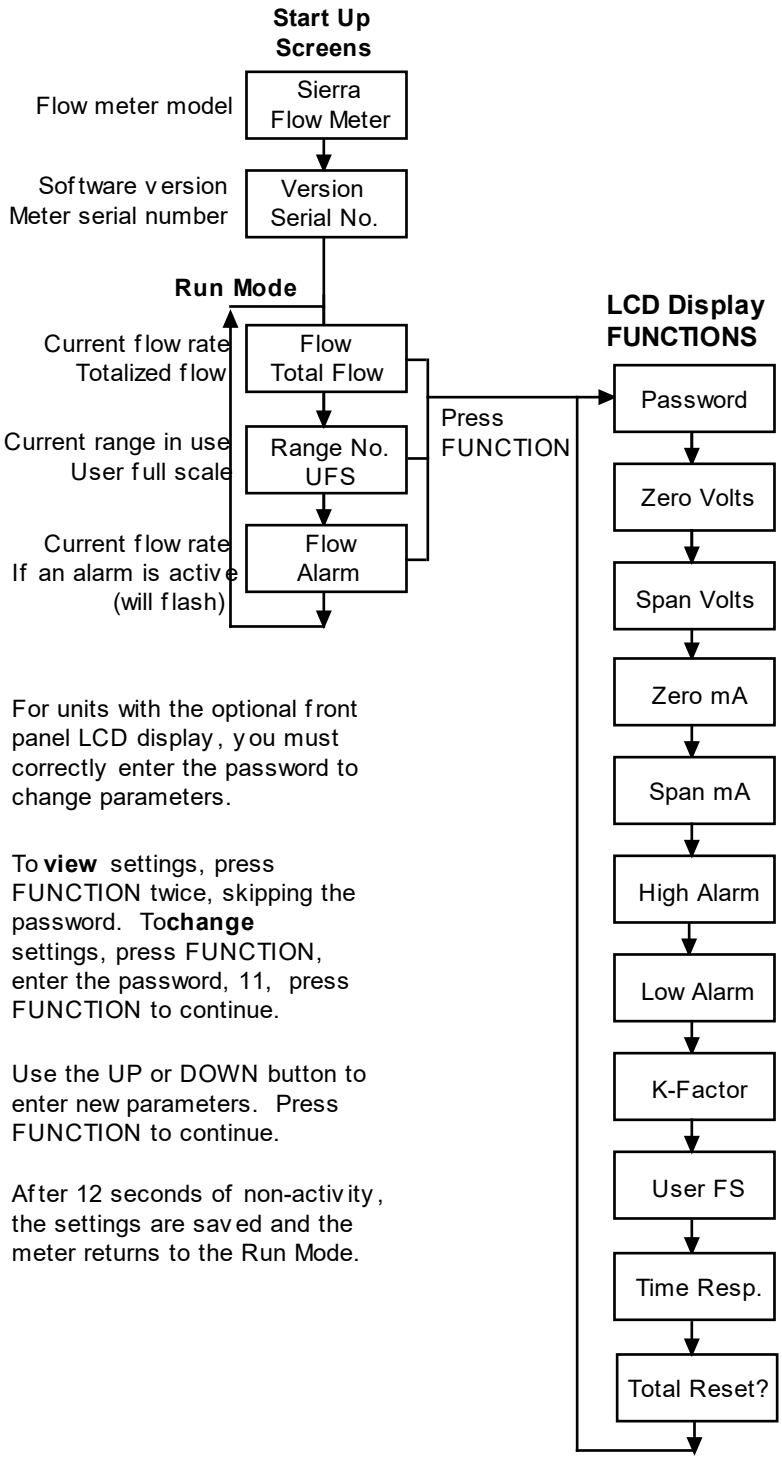

For units with the optional front panel LCD display, you must correctly enter the password to change parameters.

To **view** settings, press FUNCTION twice, skipping the password. To **change** settings, press FUNCTION, enter the password, 11, press FUNCTION to continue.

Use the UP or DOWN button to enter new parameters. Press FUNCTION to continue.

After 12 seconds of non-activity, the settings are saved and the meter returns to the Run Mode.

Entering Alarm Parameters

Caution!
The flow meter must not be reporting or measuring gas flow during adjustments.

Use the High Alarm and Low Alarm function to set or adjust alarm trip points. The alarms have a minimum hysteresis of 3% to avoid "chattering." When setting a window alarm, the alarm setpoints must be at least twice the hysteresis value apart. We suggest at least a 10% separation between window alarm setpoints. If you choose not to use the high alarm for a specific alarm function, Sierra recommends that you set the high alarm at 100% of the user full scale setting which creates an “over-range” indicator. Your flow meter will continue to indicate flow and generate a signal if the flow is over the maximum range, but will not operate within the specified accuracy.

Entering Alarms with the LCD Display

Enter alarms setpoints directly in engineering units.

1. Select the desired range. Press FUNCTION, enter the password. Press FUNCTION until *High Alarm* or *Low Alarm* appears on the display.

2. Use the UP or DOWN arrow keys to enter the high or low alarm setpoint value in engineering units.

3. Press FUNCTION to advance to the next option, or after 12 seconds of non-activity the meter returns to the Run Mode and the new parameters are in effect.

Entering Alarms without the LCD Display

When using a DVM to set alarms, the setpoint is a percentage of the flow meter’s user full scale.

VOLTS = (ALARM PERCENT x 5.0)

If you want to alarm at 25% of user full scale, used in Step 3 below, press the UP or DOWN button until 1.25 VDC is present on the DVM. If you want to alarm at 75% of user full scale, press the UP or DOWN button until 3.75 VDC is present on the DVM.

1. Set the DVM to voltage mode and connect between Vout+ and Vout– on the flow meter terminal block.

2. Select the desired range. Press the FUNCTION button until a solid “5” (high alarm) or solid “6” (low alarm) appears on the LED.

3. Adjust the UP or DOWN button until the DVM indicates the desired setpoint voltage as described above.

4. Press FUNCTION again to advance to the next option, or after 12 seconds of non-activity the meter returns to the Run Mode and the new alarm parameters are in effect.

K-Factor Adjustment

Caution!
The flow meter must not be reporting or measuring gas flow during adjustments.

Entering a K-factor adjusts the meter's output signal without affecting the factory calibration curve. Use the K-factor calibration offset for *additional* flow profile compensation (the factory includes an initial flow profile correction in the calibration curve of the unit).

Entering a K-factor with the LCD Display

A K-factor value of 1.000 means the output value is not affected and is the factory default setting. You may enter any number from 0.500 to 5.000.

1. Select the desired range. Press FUNCTION, enter the password. Press FUNCTION until *K-factor* appears on the display.

2. Use the UP or DOWN arrow keys to enter the desired K-factor value in engineering units.

3. Press FUNCTION to advance to the next option, or after 12 seconds of non-activity the meter returns to the Run Mode and the new K-factor is in effect.

Entering a K-factor without the LCD Display

A K-factor value of 1.000 VDC means the output value is not affected and is the factory default setting. You may enter any value from 0.500 to 5.000 VDC in Step 3 below. If the device indicated output is 3.0 VDC and you know it should be 3.8 VDC then you could "force" the output to the desired 3.8 VDC by adjusting the K-factor to indicate 1.27 VDC (1.27 = 3.8/3.0). Use this formula to determine the desired K-factor voltage:

VOLTS = DESIRED/ INDICATED

1. Set the DVM to voltage mode and connect between Vout+ and Vout– on the flow meter terminal block.

2. Select the desired range. Press the FUNCTION button until a solid "7" appears on the LED.

3. Adjust the UP or DOWN button until the DVM indicates the desired K-factor value as described above.

4. Press FUNCTION to advance to the next option, or after 12 seconds of non-activity the meter returns to the Run Mode and the new K-factor is in effect.

User Full Scale Adjustment

Caution!
The flow meter must not be reporting or measuring gas flow during adjustments.

The user full scale (UFS) feature adjusts the flow meter output range anywhere within 50% to 100% of the factory full scale (FFS). This feature allows you to re-range the voltage or current output of the meter to accommodate different flow rates. When entering a new user full scale setting for Range 2, it cannot be less than 10% of the Range 1 user full scale setting.

Changing the User Full Scale with the LCD Display

The factory full scale is shown on the flow meter label. If you want a UFS equal to the FFS, adjust the display to match the FFS. If you want to use 50% of FFS, adjust the display to read 50% of the FFS.

1. Select the desired range. Press FUNCTION, enter the password. Press FUNCTION until *User Full Scale* appears on the display.

2. Use the UP or DOWN arrow keys to enter the desired UFS value in engineering units.

3. Press FUNCTION to advance to the next option, or after 12 seconds of non-activity the meter returns to the Run Mode and the new UFS is in effect.

Changing the User Full Scale without the LCD Display

If the FFS is set to 11,000 sfpm and UFS is set to output 5.0 VDC, or 100%, the flow meter will indicate 5.0 VDC when 11,000 sfpm is present on the probe. If you want 6,000 sfpm for UFS, used in Step 3 below, adjust the UFS to 6000/11000 or 54.55% of factory full scale. Adjust the voltage to 2.73 VDC (2.73 = 5 x .5455). Use this formula to determine the desired UFS voltage:

VOLTS = 5 x (User Full Scale / Factory Full Scale)

1. Set the DVM to voltage mode and connect between Vout+ and Vout– on the flow meter terminal block.

2. Select the desired range. Press the FUNCTION button until a solid “8” appears on the LED.

3. Adjust the UP or DOWN button until the DVM indicates the desired user full scale as described above.

4. Press FUNCTION to advance to the next option, or after 12 seconds of non-activity the meter returns to the Run Mode and the new UFS is in effect.

Time Response Delay Adjustment

Changing the Time Response Delay with the LCD Display

1. Press FUNCTION, enter the password. Press FUNCTION until *Time Response* appears on the display.

2. Use the UP or DOWN button to adjust the time response delay from 0.10 to 7.2 seconds.

3. Press FUNCTION again to advance to the next option, or after 12 seconds of non-activity the meter returns to the Run Mode and the new time response setting is in effect.

Changing the Time Response Delay without the LCD Display

1. Set the DVM to voltage mode and connect between Vout+ and Vout– on the flow meter terminal block. Select the desired range. Press the FUNCTION button until a solid “9” appears on the LED.

2. Adjust the UP or DOWN button until the DVM indicates the desired voltage (as shown in the following table).

Volts Indicated on DVM	Time Response (Seconds)	Volts Indicated on DVM	Time Response (Seconds)	Volts Indicated on DVM	Time Response (Seconds)	Volts Indicated on DVM	Time Response (Seconds)
0.5	0.1	1.0	0.3	1.5	0.5	2.0	0.7
2.5	1.2	3.0	1.8	3.5	2.4	4.0	3.6
4.5	4.8	5.0	7.2				

3. Press FUNCTION to advance to the next option, or after 12 seconds of non-activity the meter returns to the Run Mode and the new time response delay setting is in effect.

Totalizer Reset

If your device is equipped with the optional LCD display, reset the totalizer using the keypad. If you are unable to open the flow meter enclosure, use a magnet to reset the totalizer as shown below.

1. Select the desired range. Enter the password. Press FUNCTION until *Total Reset?* appears on the display.

2. Press the UP button and then the DOWN button until the display reads “Resetting Totalizer.”

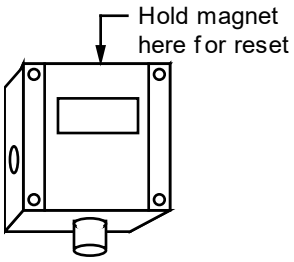

Using the FastFlo 620S Advanced Features

Caution!
Adjusting zero or span will affect meter calibration.

Zero and span (Function 1 through 4) can be used to validate system operation and calibrate the digital to analog signals on the Boiler-Trak™. Additionally, these functions can compensate for resistance in long signal cables connected to your data collection or indicating system.

You must use a certified digital voltmeter to adjust zero and span as the voltmeter acts as a standard. We recommend recording the current values as shown on the LCD display or DVM before making any changes to the zero and span settings. Note: when adjusting zero the voltage signal will be driven to 0 VDC and when adjusting span the voltage signal will be driven to 5 VDC (or 10 VDC).

Voltage Zero Adjustment

If needed, use Zero Volts (Function 1) to adjust the 0-5 VDC output to 0.0 VDC, or optional 0-10 VDC to 0.0 VDC.

1. Set the DVM to voltage mode and connect between Vout+ and Vout–.

2. Press FUNCTION, enter the password (if so equipped). Press FUNCTION until *Zero Volts* appears on the LCD display or a solid “1” appears on the LED. Adjust the UP or DOWN button until the DVM indicates between 0 and .01 VDC (no less than 0.005). The FastFlo electronics device cannot drive negative values.

3. After 12 seconds of non-activity, the meter returns to the Run Mode and the new parameter is in effect.

Voltage Span Adjustment

If needed, use Span Volts (Function 2) to adjust the 0-5 VDC output to 5.0 VDC, or optional 0-10 VDC to 10 VDC.

1. Set the DVM to voltage mode and connect between Vout+ and Vout–.

2. Press FUNCTION, enter the password (if so equipped). Press FUNCTION until *Span Volts* appears on the LCD display or a solid “2” appears on the LED. Adjust the UP or DOWN button until the DVM, indicates between 4.99 and 5.01 VDC. (For 0-10 VDC devices, the target value is 9.99 to 10.01.)

3. After 12 seconds of non-activity, the meter returns to the Run Mode and the new parameter is in effect.

Note: when adjusting zero the current signal will be driven to 4 mA and when adjusting span the current signal will be driven to 20 mA. We recommend recording the current values before making any changes to the current zero or span settings.

Current Zero Adjustment

Caution!
Adjusting zero or span will affect meter calibration.

If needed, use Zero mA (Function 3) to adjust the 4-20 mA output to 4.0 mA.

1. Disconnect the 4-20 mA (+) loop wire. Set the DVM to current mode and connect the positive lead to the wire you just disconnected. Connect the negative lead to the 4-20 mA (–) on the flow meter terminal block.

2. Press FUNCTION, enter the password (if so equipped). Press FUNCTION until *Zero mA* appears on the LCD display or a solid “3” appears on the LED. Adjust the UP or DOWN button until the DVM indicates between 3.95 and 4.05 mA. Set DVM back to voltage mode when adjustment is complete.

3. After 12 seconds of non-activity, the meter returns to the Run Mode and the new parameter is in effect.

Current Span Adjustment

If needed, use Span mA (Function 4) to adjust the 4-20 mA output to 20.0 mA.

1. Disconnect the 4-20 mA (+) loop wire. Set the DVM to current mode and connect the positive lead to the wire you just disconnected. Connect the negative lead to 4-20 (–) on the flow meter terminal block.

2. Press FUNCTION, enter the password (if so equipped). Press FUNCTION until *Span mA* appears on the LCD display or a solid “4” appears on the LED. Adjust the UP or DOWN button until the DVM indicates between 19.95 and 20.05 mA. Set DVM back to voltage mode when adjustment is complete.

3. After 12 seconds of non-activity, the meter returns to the Run Mode and the new parameter is in effect.

Instrument Validation

System electronics are verified by injecting a known input value and confirming that the flow meter outputs the expected value. This test confirms that the microprocessor, analog to digital and digital to analog converters, the linearizer and the display are working properly. Sensor validation is accomplished by measuring the resistance of the velocity and temperature sensors and comparing the results to the NIST-traceable calibration data provided with the flow meter. These tests confirm that your meter is working correctly and the calibration variables did not drift, shift or change values.

Important!
The best way to perform this Validation is to use the SIP134 software shipped with your meter. It will guide you through the process and will perform all the calculations for you. It requires a PC running Windows XP,Windows 7 or Windows 8, with 1 COM port. See the IM-SIP manual for more info.

To perform the instrument validation procedures you will need these items:

- Certified digital multimeter with minimum 4 character resolution, accuracy of at least ± 0.1% of range
- Calibration Certificate supplied with the flow meter
- small pot adjusting tool (screwdriver)

Before beginning the validation procedures, review Figure 3-2 and Figure 3-3 to familiarize yourself with the component locations.

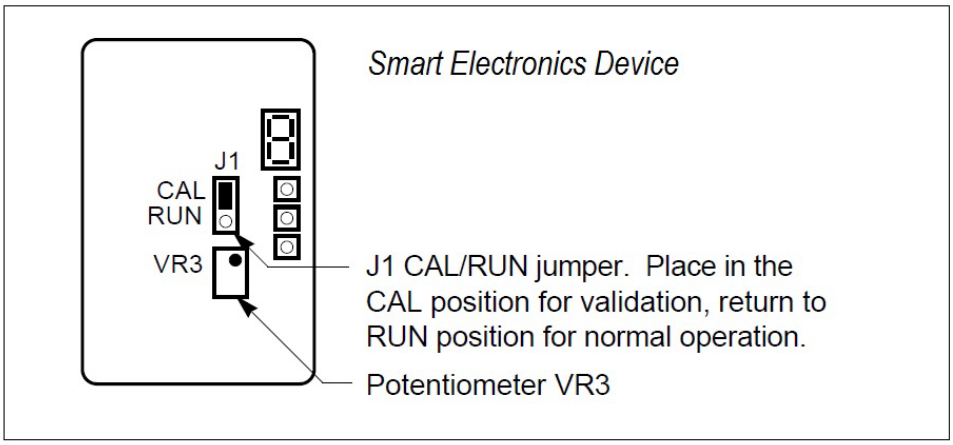

Figure 3-2. Electronics Validation Component Locations

Electronics Validation Procedure (Manual method)

Caution!
Before beginning this procedure, make sure the flow meter is not actively monitoring or reporting to any master control system. Any adjustment to the electronics will cause direct changes to flow control settings.

1. Verify the flow meter is off line from any remote communications. Make sure the meter's user full scale setting is the same as the factory full scale setting. If not, adjust the user full scale value as needed.

2. Locate the Calibration Certificate supplied with the flow meter. Record in Table 3-1 the five bridge voltage values, the output (VDC or mA) values and the indicated flow values.

3. Remove power from the flow meter. Remove the cover(s) of the flow meter enclosure to access the wiring terminal block and the FastFlo electronics.

4. Set the multimeter to the 20 volt range. Connect to BV(+) and BV(–) terminals on the flow meter terminal block.

5. Move the J1 Cal/Run jumper on the FastFlo electronics to the CAL position. Locate potentiometer VR3 on the FastFlo electronics. Turn on power to the flow meter.

6. Adjust potentiometer VR3 until the multimeter matches the first bridge voltage point (the value must be ± 0.002 VDC of the bridge voltage point).

7. Record the resulting flow shown on the optional LCD display in Table 3-1. If not using a display or if you prefer to validate one of the analog output signals, move the multimeter + connection to Vout (+). Record the resulting output voltage in Table 3-1. If using a 4-20 mA calibrated meter, set the multimeter to read current and connect the meter to read the mA signal in your connected loop. Record the resulting current output in Table 3-1.

8. Repeat Step 6 and Step 7 to record the results of the remaining four bridge voltage validation points in Table 1. Compare the values recorded in Table 3-1. Indicated values must be within the flow meter's stated accuracy shown on the Calibration Certificate.

9. When data collection is complete, turn off power to the flow meter. Disconnect the multimeter from the flow meter terminal block.

10. Place the J1 Cal/Run jumper in the RUN position. Make sure the jumper is securely in place before resuming flow meter operation. Replace the flow meter cover(s).

Important!
Before preforming the Sensor Validation using this manual procedure you will need obtain the Ro and Alpha values for the sensors. These values can be retrieved from the meter using the SIP134 software, or obtained from Customer Service.

Calibration Certificate Values				Validation Test Results			
Sam-ple Point	Bridge Voltage	Indicated Flow	Output (V or mA)	Indicated Flow (LCD)	Flow Meter Stated Accura-cy	Output (V or mA)	Flow Meter Stated Accuracy
0%							
25%							
50%							
75%							
100%							

Table 3-1. Electronics Validation Results

Sensor Validation Procedure (Manual method)

Warning!
Do not power the flow meter with only one of the sensors connected. This could cause over-heating of the sensors and/or damage to the electronics.

1. Obtain the Ro and Alpha values for both the temperature and the velocity sensors. To obtain these, use the SIP134 software and provided SIP cable and navigate in the software to Advanced Options/Save Variables to Disk/Start/Save/OPEN FILE (using a text program such as WordPad). Scroll down to Alpha and Ro values for both sensors. Use these in your manual calculations. If you do not have access to the software, contact the factory and supply the serial number and sales order number and we can normally supply these values.

2. **Turn off power to the flow meter. Allow a 6-minute cool-down before continuing.**

3. Remove the cover of the flow meter enclosure to access the sensor connection points. Remove the four-position jumper from J5, J6, J7 and J8 as shown below.

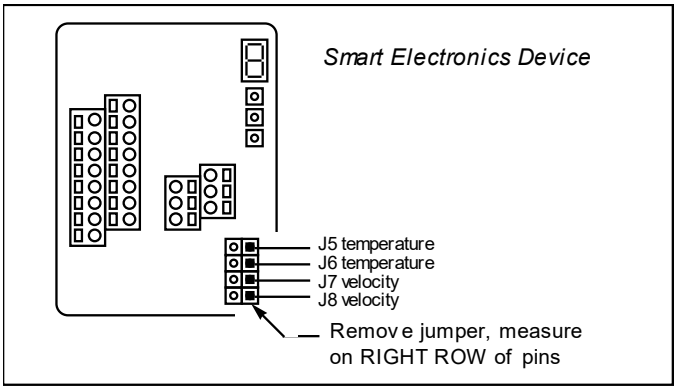

Figure 3-3. Sensor Validation Component Location

4. Set the multimeter to read Ohms in the 2K range. Connect the multimeter to terminals J5 and J6 (temperature sensor). Measure the resistance between J5 and J6 and record the temperature sensor resistance (in Ohms) in Table 3-2.

5. Set the multimeter to read in the 200 Ohm range. Connect the multimeter to terminals J7 and J8 (velocity sensor). Measure the resistance between J7 and J8 and record the velocity sensor resistance (in Ohms) in Table 3-2.

6. Use the measured resistance values and the Ro and Alpha values from the Calibration Certificate to calculate the temperature for each sensor as follows:

$$T = \frac{R - R_o}{\text{Alpha} \times R_o}$$

Where

T = degrees Celsius
R = measured sensor resistance
R_o = resistance at 0° C (from the Calibration Certificate)
Alpha = value unique to each sensor (from the Calibration Certificate)

7. Compare the results recorded in Table 3-2. The sensors are validated if they are within 10 degrees Celsius of each other.

8. Disconnect the multimeter and replace the four-position jumper on the sensor terminals. **Make sure the jumper is securely in place before applying power.** Replace cover.

Temperature Sensor Resistance	**T (from equation)**
Velocity Sensor Resistance	**T (from equation)**

Table 3-2. Sensor Validation Results

Chapter 4 Troubleshooting and Repair

Troubleshooting the Flow Meter

Warning!
Always remove main power before disassembling any part of the mass flow meter.

Caution!
Before attempting any flow meter repair, verify that the line is not pressurized.

Begin hardware troubleshooting by verifying the following facilities issues are correct. These areas impact system operation and must be corrected prior to performing any flow meter inspections.

1. Verify the incoming power to the flow meter is present and of the correct voltage and polarity.
2. Check the flow meter wiring for correct connections as described in Chapter 2.
3. Verify the flow meter is installed with the correct number of upstream and downstream pipe diameters as shown on page 2-2.
4. Verify the flow direction indicator is correctly aligned pointing downstream of flow.
5. Make sure there are no leaks in the line being measured.

After verifying the factors above, follow the troubleshooting procedures outlined on the next page. If you need to return the flow meter to the factory, see the page 4-3 for Return Material Authorization (RMA) and shipping instructions.

Flow Meter Calibration

Sierra Instruments maintains fully equipped, quality controlled Flow Calibration Metrology Laboratories for re-calibration. These laboratories have ISO 9001 certification. If the flow body or electronics have been damaged or if you simply want to have the flow meter re-calibrated, contact the factory for shipping instructions. Calibration must be performed by qualified personnel using NIST-traceable equipment.

Problem	Possible Cause	Solution
Velocity measurement is erratic or fluctuating	Very erratic or non-uniform flow	Follow installation requirements given in Chapter 2
	Flow meter installed with less than required pipe diameters upstream and downstream of the sensor	Follow installation requirements shown in Chapter 2
	Insertion sensor probe not mounted securely	Sensor probe must be mounted securely without vibration
	Sensor component broken	Return to factory for replacement
	Malfunction in system electronics	Return to factory for evaluation
	Ground loop	Check wiring, see Chapter 2
	Moisture present in the gas flow	Install a water trap or filter upstream of the flow sensor
Velocity measurement seems too high or low	Sensor assembly not aligned correctly to flow	Correct alignment with the flow indicator pointing downstream
	Sensor probe not inserted to the proper depth	Verify sensing point is located on the centerline of the pipe
	FastFlo™ electronics programming is incorrect	Check all settings, see Chapter 3
	Flow profile influences	Correct with K-factor adjustment or find another mounting location
	Flow has exceeded the maximum range of the flow meter	Reduce flow below the maximum range shown on the meter's nameplate or contact the factory for re-calibration advice
	Extremely turbulent flow	Do not place the meter near a ventilator, static mixer or valve
No response to flow from sensor assembly	No power	Turn on power to the flow meter
	Low flow cutoff too high	Correct low flow cutoff programming using Sierra's Smart Interface software
	Flow rate below meter's minimum flow rating	Contact factory for instructions
	Microprocessor locked	Switch off power, wait 10 seconds, restore power
	Sensor failure	Return to factory for evaluation
	Printed circuit assembly defective	Return to factory for evaluation

Obtaining a Return Material Authorization

If you encounter any problem with your instrument, review the configuration information for each step of the installation, operation, and set up procedures as explained in this manual. Verify that your settings and adjustments are consistent with factory recommendations.

If the problem persists, Sierra is eager to help you. You may contact us at any of the following Technical Support Centers listed below. It may also help to call your Sierra Sales Agent, who is also well trained in the operation of the product.

IMPORTANT: When contacting Technical Support, make sure you have included the following information:

- The flow range, serial number, Sierra order number and model number (all marked on the instrument data label).
- The problem you are encountering and any corrective action taken.
- Application information (gas, pressure, temperature, pipe and fitting configuration).

Customer Service and Support Information:

Email Technical Support: service@sierrainstruments.com
Email Sales: sales@sierrainstruments.com

FACTORY USA
PHONE: +1-831-373-0200
EMAIL: service@sierrainstruments.com

Asia Sales & Service Center:
PHONE: + 8221 5879 8521
EMAIL: www.sierra-asia.com

Returning Equipment to the Factory

Factory Calibration—All Models

Sierra Instruments maintains a fully-equipped calibration laboratory. All measuring and test equipment used in the calibration of Sierra transducers are traceable to NIST Standards. Sierra is ISO-9001 registered and conforms to the requirements of ANSI/NCSL-Z540 and ISO/IEC Guide 25.

Instructions for Returning Your Instrument for Service

The following information will help you return your instrument to Sierra Instruments' Factory Service Center and will ensure that your order is processed promptly. Prices may vary depending on the flow range, type of gas and operating pressure of your unit. To request detailed pricing, contact your local Sierra Instruments distributor or contact one of our offices directly.

Please follow these easy steps to return your instrument for factory service:

1. To obtain a Return Materials Authorization (RMA) number from the Sierra Instruments to **http://www.sierrainstruments.com/rma/new.php** to create a Sierra Account.
2. Once you have created an account, click on the *Submit New RMA* tab and fill in the RMA form and follow the instructions. You will receive an email confirmation once you have submitted your RMA.
3. Print a copy of the RMA (that now includes RMA #) and send a copy of the RMA form along with your meter back to the factory.

If you require service beyond calibration, but do not know which service(s) will be required, describe the symptoms as accurately as possible on the RMA form.

Pack your instrument carefully. Use the original packaging and foam or bubble wrap (packing peanuts NOT recommended) and include a copy of the RMA form (complete with Sierra supplied RMA number) with the unit(s).

Ship the unit(s) to the following address:

Sierra Instruments, Inc.
Attention: Factory Service Center
20 Ryan Ranch Road, Suite 109
Monterey, CA 93940 USA
RE: RMA# (your number)

Appendix A Product Specifications

2

DIMENSIONAL SPECIFICATIONS

NEMA 4X—Side View (N2)

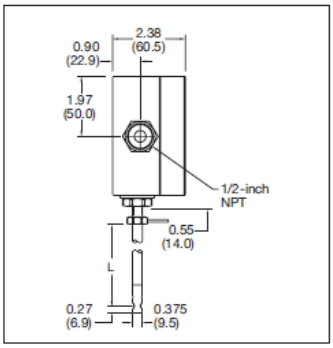

NEMA 4X—Front View (N2)

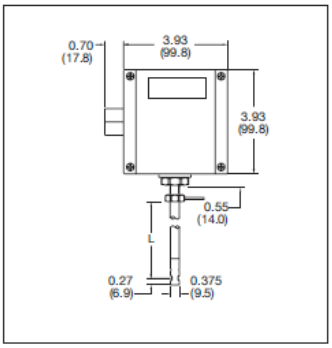

NEMA 4X with Junction Box—Side View (N4)

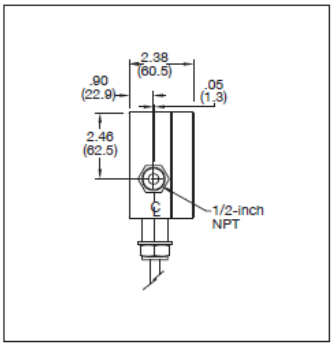

NEMA 4X with Junction Box—Front View (N4)

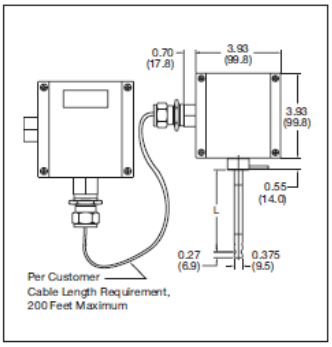

All dimensions are inches. Millimeters are in parentheses . Certified drawings are available on request.

TABLES

Length Chart	
Code	**Rating**
L04	4.0 (101.6)
L06	6.0 (152.4)
L09	9.0 (228.6)
L13	13.0 (330.2)
L18	18.0 (457.2)
L24	24.0 (609.6)

PERFORMANCE SPECIFICATIONS

Accuracy of Point Velocity
+/- 1% of full scale

Repeatability
+/- 0.2% of full scale

Temperature Coefficient
+/- 0.02% of reading per °F within +/- 50°F of customer specified conditions
+/- 0.03% of reading per °F within +/- 50°F to 100°F of customer specified conditions
+/- 0.04% of reading per °C within +/- 25°C of customer specified conditions
+/- 0.06% of reading per °C within +/- 25°C to 50°C of customer specified conditions

Pressure Coefficient
.02% per psi for air, consult factory for other gases

Response Time
200 milliseconds to 63% of final velocity value

OPERATING SPECIFICATIONS

Gases
Most non-corrosive gases

Gas Pressure
150 psig (10.34 barg) maximum design pressure

Pressure Drop
Negligible

Gas & Ambient Temperature
Gas . . . . . -40° to 176°F (-40° to 80°C)
Ambient. . . . . -40° to 120°F (-40° to 50°C)

Power Requirements
18 to 30 VDC (regulated), 625 mA draw maximum,
625 mA maximum operating current at 24 VDC and full scale flow. Maximum in rush current of 2 Amps at 24 VDC. Consult factory for other conditions.

Output Signal
Linear 0–5 VDC or 0-10 VDC, 1000 ohms minimum load resistance or
Linear 4–20 mA proportional to mass flow rate,
700 ohms maximum resistance power supply dependent
User-selectable. Active non-galvanically separated or passive galvanically separated (loop power required)

DIGITAL COMMUNICATION

Modbus RTU

OPERATING SPECIFICATIONS (CONTINUED)

3

Alarms
Hard contact user-adjustable high and low
Dead band adjustable with Smart Interface™ software
Relay ratings. . . . . Maximum 42 VAC or 42 VDC, 140 mA

Displays
Alphanumeric 2 x 12 digit backlit LCD
Adjustable variables via on-board switches (password protected)
or with Smart Interface™ software
Adjustable variables Full scale (50 to 100 %)
Time Response (1 to 7 seconds)
Correction factor setting (0.5 to 5)
Zero and span

Totalizer
Eight digits (99,999,999) in engineering units
Resettable by software, on-board switches or external magnet

Software
Smart Interface™ Windows™-based software
Minimum 8 MB of RAM, preferred 16 MB of RAM
RS-232 communication
Additional features . Alarm dead band adjustment
Low flow cut-off adjustment
Linearization adjustment
Save / Load configurations
Flow meter validation

PHYSICAL SPECIFICATIONS

Wetted Material
Probe. 316SS
Sensor. . . . . 304SS, glass coating epoxy

Enclosure
NEMA 4X (IP65) powder-coated cast aluminum

Electrical Connections
One 1/2-inch female NPT

Mounting (optional)
3/8-inch tube compression fitting with 1/2-inch male NPT
Weldolet
Flat Duct Bracket
Curved Duct Bracket

Certifications
CE approved

® Viton, Neoprene, Kalrez, and Teflon are registered trademarks of Dupont. Windows and Excel are registered trademark of Microsoft.

4

ORDERING THE 620S

	Features						Options			
620S -	☐ -	☐ -	☐ -	☐ -	☐ -	☐ -	☐ -	☐ -	☐ -	☐
Parent	1	2	3	4	5	6	1	2	3	4

Instructions: To order the 620S please fill in each number block by selecting the codes from the corresponding features and options below.

Parent Number	
620S	FastFlo™ Insertion Mass Flow Meter. 18-30 VDC input power with a 3/8-inch diameter probe. Includes "Smart Electronics" with PC configuration software

Feature 1: Probe Length	
L04	4-inches (10 cm)
L06	6-inch (15 cm)
L09	9-inch (23 cm)
L13	13-inch (33 cm)
L24	24-inch (61 cm)

Feature 3: Output	
V1	0-5 VDC, linear
V3	0-10 VDC, linear
V4	4-20 mA, linear (default)

Feature 5: Digital Communications	
XX	None
P1	Totalizer pulse output (1 Hz max)
MB	Modbus communications protocol

Option 1: Non-Resettable Totalizer	
NRT	Totalizer cannot be reset in the field.

Option 3: Mounting Orientation	
LU	Mounted left side, flow up.
LD	Mounted left side, flow down.
RU	Mounted right side, flow up.
RD	Mounted right side, flow down.

Feature 2: Electronics Enclosure	
N2	NEMA 4X (IP65) Enclosure. Mounted directly on probe.
N4	Remote NEMA 4X (IP65) Enclosure with Junction Box. Cable sold separately.

Feature 4: Display	
NR	No readout
DD	Digital display. 2 x 12 digit, backlit, LCD display

Feature 6a: Gas	
00	Air
01	Argon
02	Carbon dioxide
06	Helium
10	Nitrogen
99	Other--Consult Factory Gas Table

Option 2: Remote Cable	
C010	Remote cable, 10-foot length, 20AWG
C025	Remote cable, 25-foot length, 20AWG
C050	Remote cable, 50-foot length, 16AWG
C100	Remote cable, 100-foot length, 16AWG

Option 4: Oxygen Cleaning	
O2C	Flow meter cleaned and bagged for oxygen (O2) service, includes cert.

Sierra Instruments

North America
20 Ryan Ranch Rd, Suite 109
Monterey, California 93940
+1.831.373.0200 • sierrainstruments.com

Asia
Second Floor Building 5 • Senpu Industrial Park • 25 Hangdu Road Hangtou Town • Pu Dong New District • Shanghai, P.R. China 201316 • +8621 5879 8521/22

620S J 12/25

Appendix B Warranty Policy

LIMITED WARRANTY POLICY- REGISTER ONLINE

All Sierra products are warranted to be free from defects in material and workmanship and will be repaired or replaced at no charge to Buyer, provided return or rejection of product is made within a reasonable period but no longer than one (1) year for calibration and non-calibration defects, from date of delivery. To assure warranty service, customers must register their products online on Sierra's website. Online registration of all of your Sierra products is required for our warranty process. Register now at www.sierrainstruments.com/register. Learn more about Sierra's warranty policy at www.sierrainstruments.com/warranty.